ADIX VS

Technical Manual

IWATSU
TELECOMMUNICATIONS PRODUCTS

ADIX-VS

ADIX VS

Technical Manual

IWATSU
TELECOMMUNICATIONS PRODUCTS

Iwatsu America, Inc., 430 Commerce Boulevard, Carlstadt, NJ 07072,
TEL: (201) 935-8580, WEB: http://www.iwatsu.com, EMAIL: info@iwatsu.com

First Edition March 1999

Printed in the United States of America

01 00 99 9 8 7 6 5 4 3 2 1

This manual was written for the Omega-Phone™ ADIX-VS. In some cases, available feature operations may differ from those listed in this manual, depending on the hardware, software and programmed functions in your Omega-Phone™ ADIX-VS. For more information contact your authorized Iwatsu distributor.

Iwatsu America, Inc., has used its best effort to ensure that the information in this manual was accurate at the time of printing. Iwatsu America, Inc., makes no warranty of any kind, expressed or implied, with regard to the contents of this manual. This information is subject to change without notice.

Iwatsu America, Inc., shall not be held responsible for any representation made regarding this information by any individual.

Part Number 108300

Contents

ADIX-VS

Section 1 •

ADIX-VS Introduction

ADIX-VS Physical Port Layout

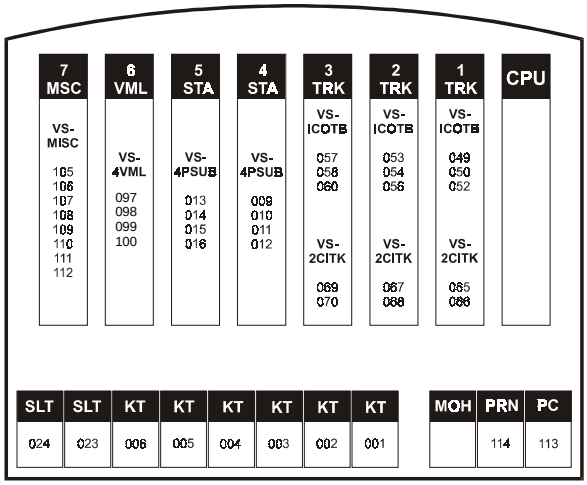

ADIX-VS Logical Port Layout

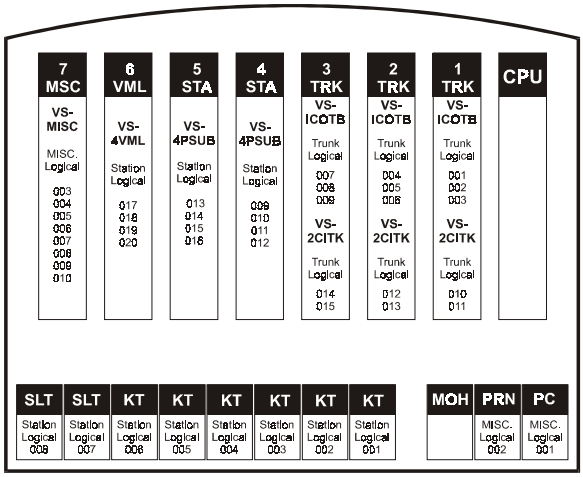

Chapter 1 •

Introduction

The Omega-Phone™ ADIX-VS is a fully digital telephone system that offers small businesses the features and presence of a large telephone system in a more cost-effective configuration. (For the remainder of this document, *ADIX-VS* will be used to refer to the *Omega-Phone™ ADIX-VS.*)

The ADIX-VS system is based on the foundation of the ADIX product line. This new system configuration offers many of the powerful ADIX features in a new smaller configuration, meeting the needs of a Small Office/ Home Office customer.

The components that comprise the ADIX-VS are described below:

VS-KSU Control Module

The VS-KSU is the Control Module of the ADIX-VS. It contains the following components:

- System Motherboard
- Central Processor Unit
- Power Supply
- Locations for Station, Trunk, Miscellaneous, Voice Mail Function Cards
- Station and Trunk Connectors

VS-MAIN Motherboard

The VS-MAIN Motherboard has connectors for the system power supply, central processing unit, and system memory battery. In addition, it contains 6 digital station ports, 2 single-line telephone ports, 1 MOH port, 1 Printer port and 1 PC/Modem port.

VS-PWSU Power Supply

The VS-PWSU Power Supply is the main power source of the ADIX-VS. It fulfills all system power requirements. Includes battery back-up interface for connection of gel cell batteries.

VS-CPU/MEM Central Processor Unit

The VS-CPU/MEM Central Processor Unit controls all ADIX-VS system functions. In addition, the VS-CPU/MEM card contains on-board RAM to store the contents of the system database.

VS-2CITK Loop Start/Caller ID Trunk Interface Card

The VS-2CITK interfaces two loop start trunks or Caller ID trunks to the ADIX-VS. This card is required to use the Caller ID feature. A maximum of three VS-2CITK cards may be installed in the system.

VS-ICOTB ISDN BRI Interface Card

The VS-ICOTB interfaces one ISDN BRI trunk to the ADIX-VS. Each ISDN BRI trunk consists of two B channels and one D channel. A maximum of three VS-ICOTB cards may be installed in the system.

VS-4PSUB Digital Station Card

The VS-4PSUB card interfaces four additional ADIX digital stations to the ADIX-VS system. Each circuit of the VS-4PSUB is star connected to an ADIX Digital Telephone. Two VS-4PSUB cards may be installed in the system to support a maximum of 8 digital stations. Combined with the 6 digital station ports on the VS-MAIN Motherboard, the ADIX-VS system will support a maximum of 14 digital stations.

VS-MISC Miscellaneous Function Card

The VS-MISC card supports miscellaneous system functions such as Background Music (BGM), Paging, Remote Control Relays, and Sensor Input.

VS-VML Voice Mail/Auto Attendant Card

The VS-VML card provides 4 voice mail/auto attendant ports and two hours of message storage. This card is installed in slot 6 of the VS-MAIN motherboard. This card provides most of the functions offered in the ADIX IX-4VML card of the ADIX products.

About this Edition

This manual describes the installation process for the ADIX-VS Digital Telecommunications System. It is intended for use as a supplement to the *ADIX Technical Manual*. If you are installing the system, it is very important that you first familiarize yourself with the individual components of the ADIX-VS system in detail. In addition, you must be familiar with Section 6 of the *ADIX Technical Manual* which contains detailed instructions for programming system features.

Legal information required by the Federal Communications Commission (FCC) and Underwriter's Laboratory (UL) in the USA, and the Industry Canada (IC) in Canada is also included in this manual.

This manual contains the following information:

- FCC Registration and Requirements
- ADIX-VS Component Descriptions
- Installation Instructions

Each of these topics is explained in detail later in this manual.

ADIX-VS Components and Part Numbers

Listed below are the components and part numbers required for ADIX-VS.

Component	Part Number	Description
VS-KSU	057000	The VS-KSU is the Control Module of the ADIX-VS which contains the System Motherboard, Central Processor Unit, Power Supply, and locations for Station, Trunk, Miscellaneous, Voice Mail Function Cards. It also contains station and trunk connectors.
VS-MAIN	057001	The VS-MAIN Motherboard has connectors for the system power supply, central processing unit, and system memory battery.
VS-PWSU	057002	The VS-PWSU Power Supply is the main power source of the ADIX-VS.
VS-CPU/MEM	057003	The VS-CPU/MEM controls all ADIX-VS system functions. In addition, the VS-CPU/MEM card contains on-board RAM to store the contents of the system database.
VS-ICOTB	057004	The VS-ICOTB interfaces one ISDN BRI trunk to the ADIX-VS.
VS-2CITK	057005	The VS-2CITK interfaces two CO loop start or Caller ID trunks to the ADIX-VS.
VS-4PSUB	057006	The VS-4PSUB card interfaces four additional ADIX digital stations to the ADIX-VS system.
VS-MISC	057008	The VS-MISC card supports miscellaneous system functions such as Background Music (BGM), Paging, Remote Control Relays, and Sensor Input.
VS-BACB	057011	The VS-BACB is a cable used for the back-up battery connection.
VS-BATBOX	057012	The VS-BATBOX holds external batteries.
VS-VML	057015	The VS-VML 4 port VM/AA card for the ADIX-VS.

Chapter 2 •

System Preparation

Safety Warning

Keep in mind the following precautions during the installation of the ADIX-VS Digital Telephone System to ensure personal and public safety:

- Do not install telephone wiring during a lightening storm.
- Do not install telephone jacks in or near water unless the jack is specifically designed for such locations.
- Do not touch telephone wires or terminals that are not insulated unless the telephone line has been disconnected at the network interface or ADIX-VS MDF, whichever is applicable.
- Use caution when installing or modifying telephone lines.

Industry Canada Notice

Industry Canada Registration Number: 577 3326 A

Instructions to the User: The Industry of Canada label identifies certified equipment. This certification means that the equipment meets telecommunications network protective, operational, and safety requirements as prescribed in the appropriate Terminal Equipment Technical Requirements document(s). The Department does not guarantee the equipment will operate to the user's satisfaction.

Before installing this equipment, users should ensure that it is permissible to be connected to the facilities of the local telecommunications company. The equipment must also be installed using an acceptable method of connection. The customer should be aware that compliance with the above conditions may not prevent degradation of service in come situations.

Repairs to certified equipment should be coordinated by a representative designated by the supplier. Any repairs of alterations made by the user to this equipment, or equipment malfunctions, may give the telecommunications company cause to request the user to disconnect the equipment.

Users should ensure for their own protection that the electrical ground connection of the power utility, telephone lines, and internal metallic water pipe system, if present, are connected together. This precaution may be particularly important in rural areas.

Caution: Users should not attempt to make such connections themselves, but should contact the appropriate electric inspection authority, or electrician, as appropriate.

Ringer Equivalence Number (REN): The Ringer Equivalence Number (REN) assigned to each terminal device provides an indication of the maximum number of terminals allowed to be connected to a telephone interface. The termination on an interface may consist of any combination of devices subject only to the requirement that the sum of the Ringer Equivalence Numbers of all the divices does not exceed 5.

FCC Registration and Requirements

Instructions to the User: The Omega-Phone ADIX-VS Telephone System has been registered and approved by the Federal Communications Commission (FCC) for direct connection to your local telephone service. In accordance with FCC rules and regulations regarding telephone equipment, Iwatsu is required to make you aware of your rights and obligations regarding the use of this equipment. In order that we may fulfill our obligations, please take a moment to carefully read the rules and regulations contained herein that apply to you.

FCC Rules and Regulations

1. Notification to the Local Telephone Company

The local Telephone Company may request specific information about the ADIX before connection can be made to the local Telephone Company lines. When requested by the Telephone Company, the following information should be provided:

a) The FCC Registration Number for all equipment connected to an individual line.
b) The largest Ringer Equivalence Number (REN) for each line.
c) Information required for compatible operation of the equipment with the Telephone Company communication facilities.

The FCC Registration Number and Ringer Equivalence Number (REN) are printed on the equipment label located on the common equipment cabinet of the system (IX-CM/ IX-CMM/ IX-CML/ VS-KSU). The largest Ringer Equivalence Number is the sum of the Ringer Equivalence Number (REN) of each FCC registered device that is connected to the same line. The maximum Ringer Equivalence Number that can normally be used without causing faulty operation is 5.0. Check with your local Telephone Company to determine what is the maximum Ringer Equivalence Number for the telephone lines you are using. In order to connect registered terminal equipment to the Telephone Company lines, the terminal equipment must utilize an FCC "standard means of connection", often referred to as a "registered jack". The type of jack utilized on the ADIX-VS is identified by a USOC code number. Different code numbers are utilized for the various types of services provided by the Telephone Company that the systems use. The ADIX-VS system can be configured as either a Key Telephone System - Fully Protected, or a Multi-Function (Hybrid) System - Fully Protected. The following are the codes and registration numbers applicable to the Omega-Phone ADIX-VS equipment:

ADIX-VS FCC Registration Numbers	
Key Telephone System - Fully Protected	BD620Q-60444-KF-E
Multi-Function (Hybrid) System	BD6MLA-21244-MF-E

The following constitutes the other information required to be reported to the local Telephone Company when requesting service:

CALLER ID / LOOP START TRUNK
Ringer Equivalence No 0.5B
Service Order Code 9.0F
Facility Interface Code 02LS2
Registered Connection RJ21X

ISDN BRI TRUNK
Service Order Code..... 6.0
Facility Interface Codes..... 02IS5
Registered Connection..... RJ49C *

NOTE:
* NT1 required.

2. Restrictions on the Use of Registered Telephone Equipment

FCC rules governing customer owned telephone equipment specifically exclude the use of the Omega-Phone ADIX-VS system on public coin telephone (payphone) lines. The connection to party line service is subject to local state tariffs. Contact your state public utility, public service commission, or corporate commission for more information.

3. Incidence of Harm

If for some reason the Omega-Phone ADIX-VS system causes harm to the Telephone Company network, the Telephone Company will notify you in advance that temporary discontinuance of service may be required. In the event advance notice is not practical, the Telephone Company will notify you of the interruption of service as soon as possible. Also, the Telephone Company will advise you of your right to file a complaint with the FCC if you believe it is necessary. The Telephone Company may also make changes in its facilities, operations, or procedures that could affect the operation of your system. If this occurs, the Telephone Company will provide advance notice in order for you to make the necessary modifications to maintain uninterrupted service.

4. Hearing-Aid Compatibility

The Omega-Phone ADIX-VS telephone system, utilizing telephone station equipment manufactured by Iwatsu, meets all FCC requirements for Hearing-Aid compatibility.

5. Instruction Regarding the Repair and Refurbishment of Registered Equipment

Only the manufacturer or its authorized agents are permitted under the FCC rules to make other than routine repairs to registered telephone equipment. Repairs made to registered telephone equipment by unauthorized entities will void equipment warranties as well as violate local state tariffs. Routine repairs are classified typically as lamp replacement, fuse replacement, directory label replacement, etc. All other repairs to your Omega-Phone ADIX-VS telephone equipment should be performed by Iwatsu America, Inc. When trouble is experienced on any telephone line that your system is connected to and the trouble is causing harm to the network, the Telephone Company may request that you remove the equipment from the telephone line(s) until the problem has been corrected. To contact Iwatsu America, Inc. for information regarding the repair of your equipment, write or call:

(201) 935-8580
IWATSU AMERICA, Inc.
430 Commerce Boulevard
Carlstadt, NJ 07072
Attn: Repair Department

6. Use of Other FCC Registered Equipment

Aside from the Ringer Equivalence reporting as explained (above), use of other FCC equipment may provide for specific limitations depending upon the type of equipment. Check the instructions included with such equipment to determine what the limitations are, if any, on the use of such equipment.

7. Automatic Dialers

The Omega-Phone ADIX-VS system contain features that provide for the automatic dialing of outgoing calls. When programming Emergency Numbers and (or) making test calls to Emergency Numbers:

a) Remain on the line and briefly explain to the dispatcher the reason for the call.
b) Perform such activities in the off-peak hours such as early morning or late evening.

8. Toll Restriction and Optimized Routing Features

The Omega-Phone ADIX-VS system provides both Toll Restriction and Optimized Routing features that may be programmed in your system. The software or programming contained in the ADIX-VS system may be required to be upgraded to allow user access to the network in order to recognize newly established network area codes and exchange codes as they are placed in service. Failure to upgrade the programming or software (if required) to recognize the new codes as they are established will restrict the user from gaining access to the network and to these codes. Bell Communication Research (Bellcore) publishes North American Numbering Plan (NANP) information in paper, microfiche and tape. An abbreviated summary of the newly established area codes and exchange codes is also available. Bellcore may be contacted at (973) 829-2000 or on the Internet at www.bellcore.com to obtain the appropriate information for keeping current with changes in the NANP.

9. Radio Frequency Emissions

The Omega-Phone ADIX-VS Telephone System is registered with the FCC as a Class A RF Device that may radiate radio frequency emissions. In the event that the system causes interference with another device, steps must be taken to reduce the interference, including possible removal of the equipment. While the probability of such an event is low, consult Iwatsu America, Inc. for further assistance if this occurs.

10. Equal Access Requirements

This system is capable of providing users access to interstate providers of operator services through the use of equal access codes. Failure to provide equal access capabilities is a violation of the Telephone Operator Consumer Services Improvement Act of 1990 and Part 68 of the FCC rules.

11. Electrical Safety Advisory

While this system is fully compliant with FCC Rules and Regulations, it is recommended that an AC surge arrestor of the form and capacity suitable for the model of system purchased be installed in the AC outlet to which the system is connected. Consult with your distributor as to the surge protector requirements for your system.

12. Music-On-Hold

In accordance with U.S. Copyright Law, a license may be required from the American Society of Composers, Authors and Publisher, or other similar organization, if radio or TV broadcasts are transmitted through the music-on-hold feature of the telecommunication system. Iwatsu America, Inc., hereby disclaims any liability arising out of the failure to obtain such a license.

13. Use of Call Recorder and VM Record

In certain states it is illegal to intercept and/or record telephone calls. In certain states and under certain circumstances it is illegal to intercept for the purposes of listening in and/or recording telephone calls. Because such activity is not illegal in all jurisdictions and may be permitted in training and/or monitoring of personnel, this telephone system can be programmed to permit interception and/or recording with or without warning to those on the line. Before utilizing the system for such purposes, you are advised to consult with an attorney familiar with laws of the jurisdiction in which you utilize such feature. Iwatsu America, Inc., its distributors, and the manufacturers responsible for this feature make no representations with respect to the legality of its use and disclaim any liability for claims and/or damages arising from the use or misuse of this feature.

14. Emergency 911

ADIX-VS can be configured to use assigned telephone numbers (Caller ID or ANI) for defined areas based on the proposed "40,000 sq. ft. rule." This “Area Routing” feature provides the 911 Public Service Answering Point (operator) information that identifies the general location of the caller.

IWATSU AMERICA, INC.

Chapter 3 •

ADIX-VS System Specifications

ADIX-VS System Capacity

The ADIX-VS key service unit (VS-KSU) provides seven card slots. The capacity and general specification are listed below.

Maximum Physical Ports:..... 114 (addressable ports)
- System terminals ..... 112 (addressable ports)
- Serial ports..... 2

Maximum Logical Ports 45
- Digital Stations 14
- Single-Line Stations 2
- Voice Mail Ports 4
- ISDN BRI Trunks (6 B Channels, 3 D Channels) 9
- Loop Start/Caller ID Trunks 6
- Miscellaneous Function Ports 8
- Serial Ports (1 PC Programmer, 1 SMDR) 2

Station Circuits..... 16
- Single Line Telephones (Standard) 2
- Digital Telephones 14
  - Standard..... 6
  - Optional 8
- Voice Mail Ports 4

Trunks Supported
- Loop Start Trunk 6
- ***Or***
- Caller-ID Trunk 6
- ***Or***
- ISDN BRI (6 B Channels, 3 D Channels)..... 3

VS-KSU Card Slots..... 8
- CPU Slot 1
- Trunk Card Slots..... 3
- Station Card Slots 2
- Voice Mail (VS-4VML) Card Slot..... 1
- MISC Card Slot 1

System Features

Standard Features

- Music On Hold
- SMDR
- Local Database Programming Terminal Connection
- Remote Database Programming Provision

Optional Features

- External Zone Paging (2 zones)
- Remote Control Relays
- Loud Ringer Connection
- Voice Mail

Feature Specifications

Group Features

Trunk Access Groups 10
Hunt Groups..... 10
Paging Groups (2 external zones) 10
ICM Groups..... 10
Toll Restriction Control Groups..... 10
Members Within a Group
    Hunt Group 16
    Paging Group..... 16

Digital Station Features

Station Types ..... SATT (No DSS), KT, VT
Attendant Positions 1
Attendant Key Patterns 1
Digital Station Key Patterns 13
Speed Dial Bins ..... 10 personal/90 system
Forced Account Codes: 15
Conference Circuits 2
Abandoned Call Storage..... 50

Component Specifications

VS-KSU Control Module

8 Card Slots
Dimensions (HxWxD): 13.8"x16.5"x5.9"
Weight: Approximately 14.5 lbs. fully loaded

VS-PWSU Power Supply

Dimensions (HxWxD):	2.5"x4.7"x8.3"
Weight: 4 lbs.	
VS-PWSU Input:	167 watts to 240 watts

AC Input

AC Input Voltage Tolerance:	
VS-PWSU:	108V-132V @ 120V
Frequency Tolerance:	
VS-PWSU:	47 Hz -63 Hz
Maximum Input Current	
VS-PWSU:	2.0 A

Switch Parameters

Time Division Multiplexed PCM32
Mu-law Speech Compression
Time Slots: 114
Stored Program
Distributed Multi-microprocessor

System Memory

Component	Flash Memory	RAM
VS-CPUMEM	4 MB	2 MB

Heat Dissipation

VS-PWSU (maximum):	162 BTU/hr

Environment

Operating Temperature:	0° to 40°C/32° to 104°F
Storage Temperature:	-10° to 50°C/14° to 122°F
Relative Humidity (non-condensing):	10% to 90%

Ringing Generator

Frequency:	20 Hz
Amplitude:	90 VAC
Maximum Simultaneous Ringing (SLT):	2

Battery Backup

The ADIX-VS (VS-PWSU) power supply includes a battery interface. Backup time is dependent upon battery array, system size and system usage.

FCC Registration Number

KF: BD6MLA-21247-KF-E
MF: BD6MLA-21244-MF-E

Industry Canada (IC) Number

577 3326 A

Facility Interface Codes

Caller ID Trunks:	02LS2
ISDN BRI:	02IS5

Attendant Position

Maximum Attendant Positions:	1

Telephone Requirements

Digital Telephones

Wiring:	1 pair
Total End-to-end Distance	
22 AWG Twisted Pair:	1,000 ft.
24 AWG Twisted Pair:	1,000 ft.
1 Star Repeater:	1,500 ft.
2 Star Repeaters:	8,000 ft.

Single Line Telephones

Wiring:	1 pair
Wiring w/Message Lamp:	1 or 2 pair
Maximum Loop Resistance	
On-premise SLT:	600 ohm
Ringing Frequency:	20 Hz

Circuits Per Card

Digital Station Card (VS-4PSUB):	4 circuits
Analog Station Ports (standard):	2 circuits
Omega-Voice VMI (VS-VML):	4 circuits
Caller ID Trunk Card (VS-2CITK):	2 circuits
ISDN BRI Trunk Card (VS-ICOTB):	1 circuit *(2B + 1D)*
Miscellaneous Function Card (VS-MISC):	5 circuits

Software

Outgoing Trunk Groups:	10
Incoming Trunk Groups:	10
Incoming Call Ringing Assignment:	16 Stations/Line.
Incoming Call Delayed Ringing Assignment:	16 Stations/Line
Doorphone Ringing Assignment:	16 Stations/Doorphones
Call Pick-up Groups:	10
CO/ICM Hunt Groups:	10
Maximum Stations per Hunt Group:	16
Paging Groups Internal:	8
Maximum Stations per Paging Group:	16
External Paging Zones:	2
Station Speed Dial:	10
System Speed Dial:	90
Maximum Digits per Speed Dial Number:	32
Speed Dial Alphanumeric ID:	10 characters
CO/Station Alphanumeric ID:	8 characters
Account Codes:	12 digits
Forced Verified Account Codes:	80
Park Orbits	
Attendant/System:	10
Station:	1
Call Forwarding:	10 steps
No Answer:	no limit
Station Numbering Plan:	flexible
Station Text Messages:	10
System Text Messages:	90
Text Message Groups:	10
Maximum Stations per Text Message Group:	16
Station Flexible Key Patterns	13
Caller ID/ANI/DNIS Tables	100
Caller ID Storage	50 calls

ADIX-VS Hardware Capacities

SYSTEM[1]	ADIX-VS
Power Supply	VS-PWSU
Card Slots	8
Number of Ports[2]	45
Trunk Ports[3]	6
Station Ports	16
Digital Station Ports	14
Voice Mail Ports	4
Attendant Positions	1
On-premise SLTs	2
Doorphones	14
Busy Bypass Units[4]	7
Caller ID Trunks	6
Loop Start Trunks	6
Conference Circuits	2
ISDN BRI Cards[3]	3
Miscellaneous Function Ports	5
Serial Ports	2

1. This table lists the maximum quantity supported for each component type. The combined total number of ports for each system is limited to the "Number of Ports" category of this table.
2. The combined number of Station, Trunk, and Miscellaneous ports may not exceed the number of ports listed in this category.
3. The total number of trunks programmed may not exceed 6 Caller ID/Loop Start Trunks or 3 ISDN BRI Lines.
4. When Busy Bypass Units are used, the total number of Digital Stations may not exceed these numbers.

Chapter 4 •

System Location and Environment

The VS-KSU Control Module and the internally mounted VS-PWSU power supply are UL and CSA listed, fulfilling the safety requirements mandated by the governments of the United States and Canada. However, environmental and structural considerations, AC power and grounding requirements and trunks characteristics must be met to ensure proper system operation. As with all processor controlled voice and data equipment, the proper operating environment is necessary for reliable operation and long-term system performance. These conditions are explained below.

Environmental and Structural Conditions

It is important to satisfy with careful consideration the environmental conditions specified for system installation. The environment in which the ADIX-VS and key telephones are located must be free of moisture, fumes, dust and vibrations. Any deviation from the recommended environment may affect the proper operation of the ADIX-VS System. If you expect to operate the system in an extreme environment, you should be aware of these limits:

Operating Temperature	0 to 40 degrees Centigrade (32 to 104 degrees Fahrenheit)
Storage Temperature	-10 to 50 degrees Centigrade (14 to 122 degrees Fahrenheit)
Relative Humidity (non condensing)	10 to 90% at 24 degrees Centigrade (75 degrees Fahrenheit)
Static Discharge	10 KV or less
Electromagnetic Interference	0.3 V/ft. or less
Ventilation	At least three inches above and to the sides of the IX-CML/IX-EXPML and power supply
Floor Strength	200 lbs. per sq. ft.

VS-KSU Control Module Location

The VS-KSU Control Module is designed to be either mounted on a wall. When selecting the location for the units, be sure that all conditions for AC power and grounding are satisfied. These requirements are specified starting on page 18. It is recommended that you:

- Mount the VS-KSU Control Module within five feet of a dedicated three-wire grounded AC outlet.
- Install the VS-KSU Control Module within twenty-five feet of the network interface provided by the local telephone company or the cross connect serving the area of the building where the VS-KSU Control Module is installed.
- Allow enough space for air circulation and the installation of additional equipment (e.g., MDF blocks, PC equipment).
- For floor mounting, allow enough space from the floor to prevent flood damage to the ADIX-VS System.

Do not place the VS-KSU Control Module in the following areas:

- Near a sprinkler system, sweating pipes, steam pipes or steam vents.
- In an extremely hot or cold area. Do not install the unit in an environment that does not meet the requirements specified on page 15.
- In direct sunlight.
- In a passage used for moving equipment.
- In areas where airborne contaminants, dust, corrosive fumes, or exhaust from machinery is present.
- In areas where high power radio frequency transmitters, transmission cables, or other sources of Electromagnetic Interference are installed 10 feet from a large commercial transformer.

Figure 1 illustrates a typical installation layout for a typical ADIX-VS system.

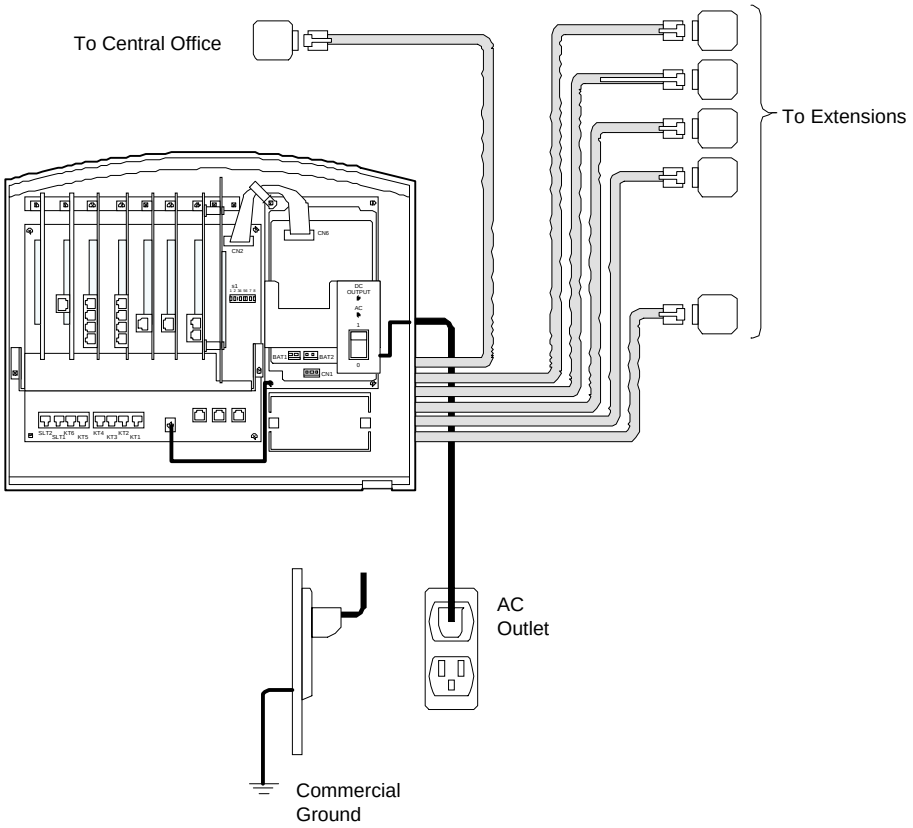

FIGURE 1. ADIX-VS INSTALLATION LAYOUT.

Note 1: When the VS-ICOTB card is installed, an NT1 device is also required. The NT1 device must be mounted near the VS-KSU. Iwatsu does not supply the NT1 device.

Note 2: It is not necessary to install protective fusing on all analog CO trunk circuits. ADIX-VS provides UL listed fuse protectors on the analog CO trunk card.

AC Power Requirements

UL Requirement:
- The ADIX-VS system must be connected to an outlet with a protective earth ground connection.
- The outlet shall be installed near the equipment and shall be easily accessible.

Clean power and proper grounding for the VS-KSU Control Module is required to maintain problem-free operation. The customer must provide a dedicated single-phase, 120 volt AC, 60Hz grounded outlet. A conventional duplex NEMA 5-15R electrical outlet is required. A 15-ampere breaker is required for the outlet to support the ADIX-VS system. The ADIX-VS System draws a maximum of 2 Amperes.

The AC circuit must conform to National Electrical Code (NEC) standards and be capable of providing noise-free power to the power supply unit. Line noise such as electromagnetic interference (EMI) may cause erratic system operation.

☞ **To protect the ADIX-VS System:**

- If AC voltage fluctuation is greater than the allowable range defined on page 32 install a computer-grade AC line voltage regulator as illustrated in Figure 2, Example 1.
- Install a noise filter on the AC power input line to prevent noise interference through the AC line as illustrated below.
- Install battery backup to maintain system power in the event of a power outage.
- Do not place radio frequency, electromagnetic or inductive devices near the ADIX-VS.
- Use a dedicated 15-ampere AC circuit with an isolated communications ground as defined in EIA/TIA 607, as illustrated in Figure 2. Do not use AC outlets that are shared with air conditioners or equipment such as a copy machine.

Use a dedicated electric circuit with a dedicated communications ground.

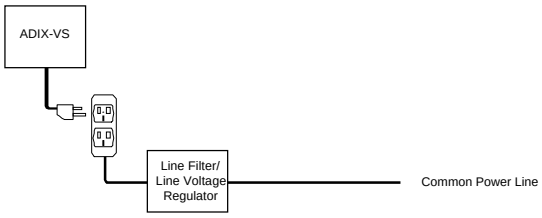

Example 1 Install a noise filter/voltage regulator

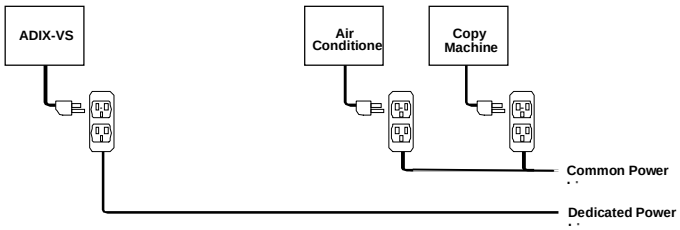

Example 2 Use a dedicated power line

FIGURE 2. RECOMMENDED AC POWER CONNECTION.

Grounding Requirements

The ADIX-VS system is a sound and reliable communications system that is not inherently subject to ground related problems. The ADIX-VS is, however, a sophisticated electronic CPU-controlled product that is susceptible to environmental factors that will and can affect system performance and component integrity.

The ADIX-VS system must be connected to an effective earth ground potential for proper system operation. The system must be properly grounded to dissipate external environmental and electrical interference such as static discharge, radio frequency interference, electromagnetic interference, electrical surges, lightning surges, and transient high voltage.

This is particularly important in any installation that has off premise cabling, station repeaters, feeder cables, underground cables and multi-vendor, multi-product installations. All products and equipment connected or integrated to the ADIX-VS system must be grounded to the same ground potential.

Items to consider when grounding the system:

- Request isolated ground receptacles for all telephone equipment in new construction.
- Any rise in ground potential, or power induction of electrical current induced in twisted pair telephone cable when using feeder cables will not be properly drained if the system is not grounded.
- Any transient rise in ground and voltage potential due to lightning or commercial electrical surge will not be properly drained if the system is not grounded.
- The shortest and most direct path to ground provides a lower impedance connection (resistive and inductive) to earth.
- Ground all equipment that is connected to the ADIX-VS system. This will provide improved ground equalization between products in a multi-product installation.
- Equipment will be damaged to some degree if the system is subject to adverse electrical surges or spikes if the equipment is not grounded.
- Effective ground reference is important in multi-product installations to prevent ground loops from occurring.

Important: All grounding used in the ADIX-VS System installation shall comply with the standards defined in National Electrical Code, NFPA 70, Article 250, and the Telecommunication Industry Association / Electrical Industry Association (TIA/ EIA) Telecommunications Ground Procedures, Article 607, including cabinets, feeder cables, network connections, and off-premise stations. Copies of the TIA / EIA, Article 607 may be purchased by contacting the EIA Standards Sales Office, at 202-457-4966.

Grounding the ADIX-VS

Example 1. Using the AC Power Cord Ground Conductor

Once it has been determined and verified that the electrical outlet that the system is connected to is a dedicated and isolated telecommunications earth ground, as defined by the National Electrical Code and the TIA / EIA as stated above, the electrical power cord ground conductor can be used as the system's reference to earth ground potential.

This means that the ground receptacle of the outlet is connected directly to a dedicated ground conductor that is secured to an effective earth ground of known potential. This is defined in detail the Articles above.

If the origin or quality of the electrical outlet ground is suspect, or is known not to have been wired in accordance with the National Electrical Code and the TIA / EIA as stated above, the AC Power Cord Ground is to be considered a poor ground. In that case, an external ground conductor must be used as the effective ground reference as defined below.

The ground conductor of the AC Power Cord is to be secured on the bottom of the Control Module frame as illustrated in Figure 3.

Example 2. Use of an External Ground Conductor

An external ground conductor must be used as the system's reference to an effective earth ground if it has been determined that the AC Power Outlet Ground is ineffective or is not a dedicated telecommunications quality ground as defined by National Electrical Code and the TIA / EIA.

The ground conductor is to be secured on the bottom of the VS-KSU Control Module frame as illustrated in Figure 3. The opposite end of the ground conductor must be bonded to an effective earth ground potential as illustrated in Figure 3. The conductor must be bonded to an earth ground rod of a known potential.

The use of cold water pipes that have historically been used for ground reference should be avoided. The prevalent use of PVC pipe in most construction today renders this ground source unreliable. It should also be noted that the use of a copper water pipe is prohibited by many building codes.

The grounding conductors must be a minimum of 12 AWG. Use wire that is either green or green and yellow striped. Use crimp terminals for all stranded wire.

Figure 3 illustrates the proper ground termination points for ground straps between the VS-KSU Control Module and the earth ground conductor.

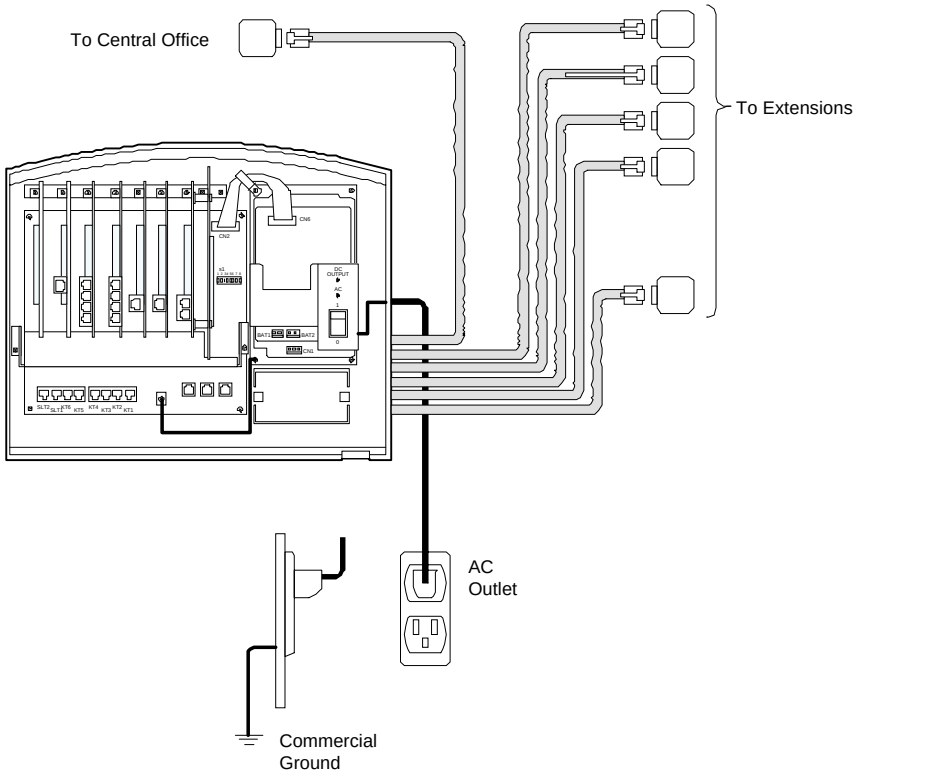

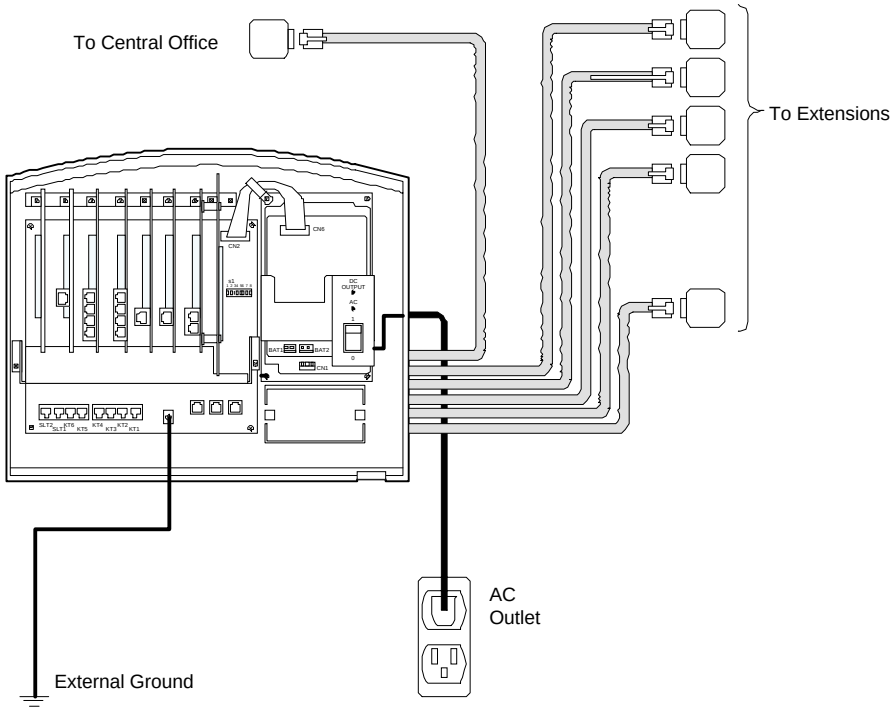

FIGURE 3. ADIX-VS GROUNDING EXAMPLES

AC Power Requirements

Before installing the VS-KSU Control Module obtain the following information from the customer:

1. **During working hours:**
   - Frequency of blackouts.
   - Frequency of brownouts.
2. **If any other computerized equipment or heavy duty machines are used:**
   - Existence of any operating problems.
   - Power line routing.
3. **Neighboring businesses.**
4. **With a multimeter on the AC voltage setting, check:**
   - Lowest line voltage — usually the busiest business hour.
   - Highest line voltage — usually an off-business hour.
   - Fluctuation of line voltage — when heavy-duty machines are turned on/off.
5. **When a line monitor is available:**
   - Record the line condition of the outlet where the ADIX-VS Control Module will be connected for a minimum of one week.

As a result of your testing, you may need to install the following line protection devices to prevent the ADIX-VS System from malfunctioning:

- Line Surge Protector.
- Line Voltage Stabilizer.
- Uninterrupted Power Supply.

Always select a device that will deliver enough power output capacity to meet the specifications listed on page 32.

Cabling

General cabling requirements for the ADIX-VS System are described in this section. For a more detailed description of cabling requirements see Sections 4 and 5 in the *ADIX Technical Manual*.

General Requirements Before running in-house cable, verify that:

- The system building plan, indicating station locations, extension numbers and device types is accurate.
- Station cable for ADIX key telephones should be home run as shown below in Figure 4:
- A suitable location has been selected for the VS-KSU and MDF.
- Loop limits and wire sizes for KTs, SLTs, and other optional equipment do not exceed the limits listed in the tables below:

Station Wire Size	
Equipment	**Cable**
ADIX Digital key Telephones	1-pair(twisted) #22/24 AWG
Single-Line Telephone(500/2500 Type)	1-pair(twisted) #24 AWG

Station Loop Limits		
Station	**Loop Limit**	**Loop Resistance**
ADIX Digital Station	1000feet	40 ohms or less
On-Premise SLTs	N/A	600 ohms

NOTE: Distances indicated must be maintained regardless of wire gauge. Resistance indicated indicated includes internal resistance of a single-line telephone.

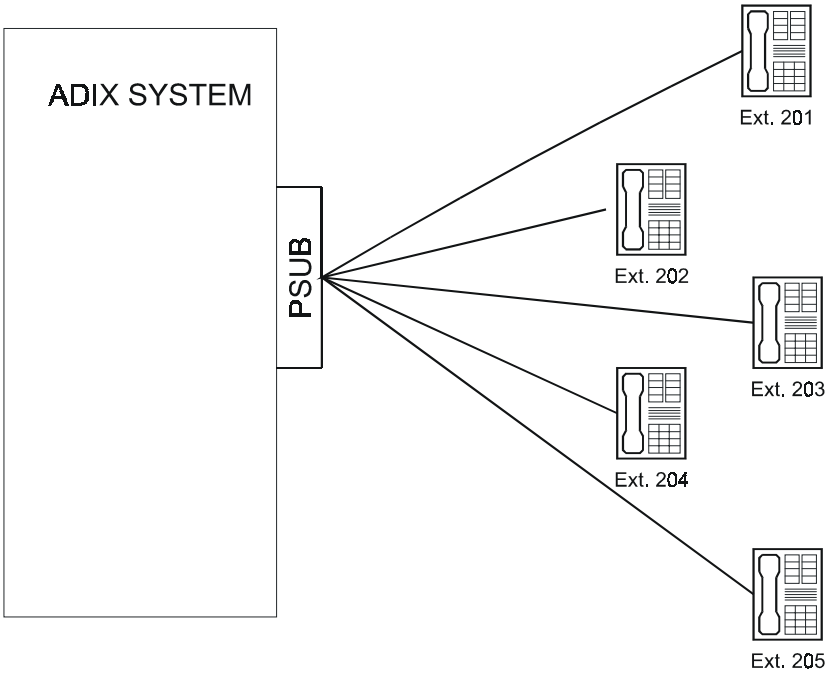

FIGURE 4. EXAMPLE OF HOME RUN STATION CABLING.

Digital Trunk Line Characteristics

The ADIX-VS System supports the following digital line circuit:

- ISDN Basic Rate Interface (BRI)

More information on ISDN BRI trunk card and VS-ICOTB card is provided later in this manual.

Analog Trunk Characteristics

The ADIX-VS System supports the following types of analog trunks:

- Caller ID Trunks
- Loop Start Trunks

Caller ID Trunk (VS-2CITK)

- Minimum ring detection is 60 Vrms.
- Recommended T/R current of 25 to 60 mA.
- Caller ID Interface conforms to Bellcore TR-30 Specification.

Section 2 •

ADIX-VS Hardware

ADIX-VS Physical Port Layout

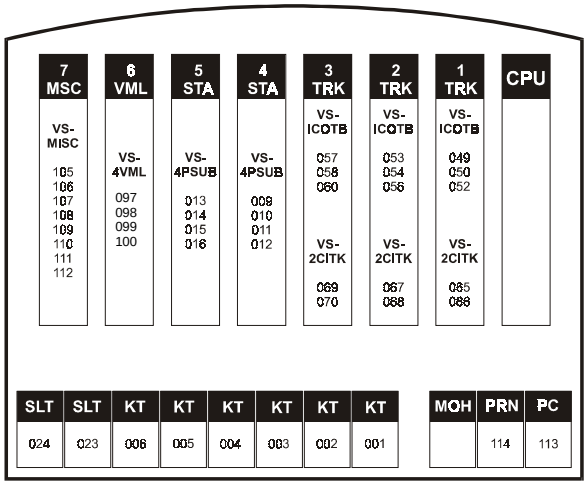

ADIX-VS Logical Port Layout

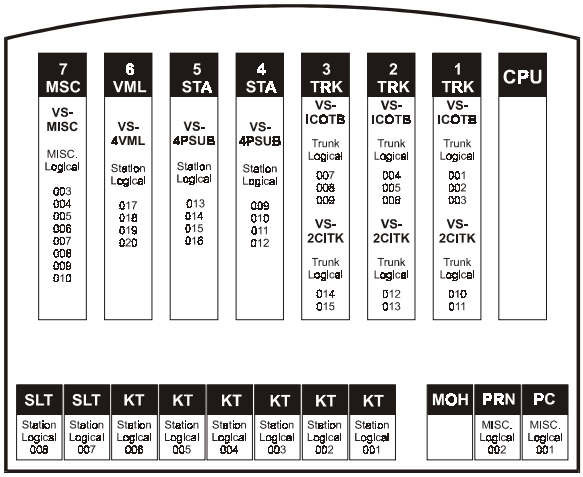

Component Description

VS-KSU Control Module

The VS-KSU Control Module is the fundamental component of the ADIX-VS system. This unit has space reserved for the VS-PWSU power supply, system battery, and VS-MAIN motherboard.

Model:	VS-KSU
Part No.:	057000
Capacity:	45 ports
CPU:	VS-CPU/MEM
Power Supply:	VS-PWSU
Size:	12.5”H x 19”W x 11.5”D
Weight:	17 lbs. Empty 30.4 lbs. Full capacity

Card Slots

Common:	1
Station:	2
Trunk:	3
MISC:	1
Voice Mail:	1

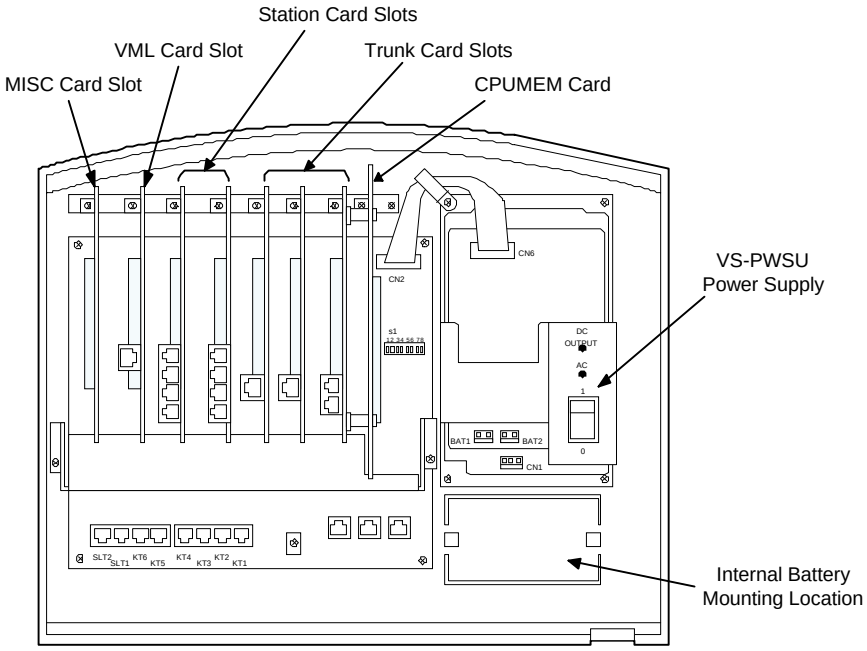

FIGURE 5. VS-KSU CONTROL MODULE AND VS-MAIN MOTHERBOARD CARD

VS-MAIN Motherboard

The VS-MAIN motherboard has a dedicated card slot for the VS-CPU/MEM CPU card. In addition the VS-MAIN Motherboard has RJ11 jacks to interface 6 Digital Stations, 2 Single-Line Stations, RJ48 jacks to interface 2 Serial Ports and an external MOH source.

Digital Station Ports. The digital station (PSUB) circuits are star connected to an ADIX digital telephone using #22/24 AWG one-pair twisted cable. Single-pair cable allows for bi-directional digital data transmission. The loop limit of ADIX digital station terminals is 1000 feet.

Single-Line Ports. The two single-line (SUBS) ports support standard 2500-Type and 500-type single-line telephones (SLT). Each SLT port has a built-in DTMF receiver. Single-line devices must be connected to an SLT port using #24 AWG one-pair (twisted or quad) wire. The loop resistance of single-line telephones is fixed at 600 Ohms(including SLT resistance).

Serial Ports. The Serial Port labeled PRINTER is used for Station Messge Detail Recording (SMDR). The Serial Port labeled PC/MODEM is used for local PC programming and Remote PC programming utilitzing an external modem.

Model: VS-MAIN
Part No.: 057001
Ports: 8 per card (2SUBS,6PSUB)
Loop Limit:
Single-line ports=600 Ohms(including SLT resistance)
Digital Station Ports=1000 feet

Additional Power Requirments: None

Circuit Protection 1:
Possitor/Themistors PTH601-PTH802
Circuit Protection 2:
Metal Oxide Varistor, Thresholed Voltage: 220 V

Compatible Station Terminals:
Single line: 2500 SLTs,500 SLTs
Digital: IX-12KTS-2/12KTD-2/IX-VTA

Software Setting: Class 01.03 Port Definition:
Class 01.04 Configuration

Connectors:

CN2	Power supply (to VS-PWSU)
CPU/MEM	To VS-CPU/MEM
SLOT1-SLOT3	To Trunk interface cards
SLOT4-SLOT5	To Station cards
SLOT6-SLOT7	To Universal cards
KT1-KT6,SLT1-SLT	Station terminals
PRINTER	SMDR Printer
PC/MODEM	PC Programmer
MOH	External MOH source

On-board Functions:

R50	MOH Volume
S401-S501	SLT Hybrid Balance
S1	Serial Port Settings

Indicators:
D1-D8

Size: 9.5”H× 9.5"W× 1.125"D
Weight: 2 lbs

VS-MAIN Switch S1 Function

Switch S1 is used to set the function for the serial port connectors on the VS-MAIN Motherboard Card.

Postion	Connector	Description	Function	
			OFF	ON
1	PC	Sets the function of the PC connector to either PC Programmer or Debug Console Mode	PC Programmer Mode	Debug Console Mode
2	PC	Select Direct or Modem as the connection mode for the PC Programmer	PC Serial Port	Modem
3	PC	Sets the Baud Rate of the PC Connector	9600 BPS	4800 BPS
4	PC	Sets the Data Bits and Parity of the PC Connector	8 bits / Non-Parity	7 Bits / Even Parity
5		Not Used		
6	PRN	Sets the Baud Rate of the PRN Connector	9600 BPS	4800 BPS
7	PRN	Sets the Data Bits and Parity of the PRN Connector	8 bits / Non-Parity	7 Bits / Even Parity
D8	PRN	Sets the PRN Connector Flow Control	DTR and X ON / X OFF	DTR Only

VS-MAIN LED Indication

No.	Name	Color	Function
D1	ISDN #1 Master Indication	Red	ON = slot #1 ISDN is working as the master clock.
D2	ISDN #2 Master Indication	Red	ON = slot #2 ISDN is working as the master clock.
D3	ISDN #3 Master Indication	Red	ON = slot #3 ISDN is working as the master clock.
D4	ISDN #1 Synchronization Indication	Green	ON = slot #1 ISDN is synchronized with the network.
D5	ISDN #2 Synchronization Indication	Green	ON = slot #2 ISDN is synchronized with the network.
D6	ISDN #3 Synchronization Indication	Green	ON = slot #3 ISDN is synchronized with the network.
D7	Not Used		Factory Test purpose only
D8	Not Used		Factory Test purpose only

VS-MAIN Pin-Out

Modular		MDF	MDF	RJ11 Jack	
Jack Number	MAIN	Pin Number	Wire Color	Pin Number	Wire Color
KT1	DT	1	W-BL	3	GN
	DR	2	BL-W	2	R
	GD	3	W-O	4	Y
	GD	4	O-W	1	BK
KT2	DT	5	W-GN	3	GN
	DR	6	GN-W	2	R
	GD	7	W-BR	4	Y
	GD	8	BR-W	1	BK
KT3	DT	9	W-SL	3	GN
	DR	10	SL-W	2	R
	GD	11	R-BL	4	Y
	GD	12	BL-R	1	BK
KT4	DT	13	R-O	3	GN
	DR	14	O-R	2	R
	GD	15	R-GN	4	Y
	GD	16	GN-R	1	BK
KT5	DT	17	R-BR	3	GN
	DR	18	BR-R	2	R
	GD	19	R-SL	4	Y
	GD	20	SL-R	1	BK
KT6	DT	21	BK-BL	3	GN
	DR	22	BL-BK	2	R
	GD	23	BK-O	4	Y
	GD	24	O-BK	1	BK
SLT1	T	25	BK-GN	3	GN
	R	26	GN-BK	2	R
	GD	27	BK-BR	4	Y
	GD	28	BR-BK	1	BK
SLT2	T	29	BK-SL	3	GN
	R	30	SL-BK	2	R
	GD	31	Y-BL	4	Y
	GD	32	BL-Y	1	BK

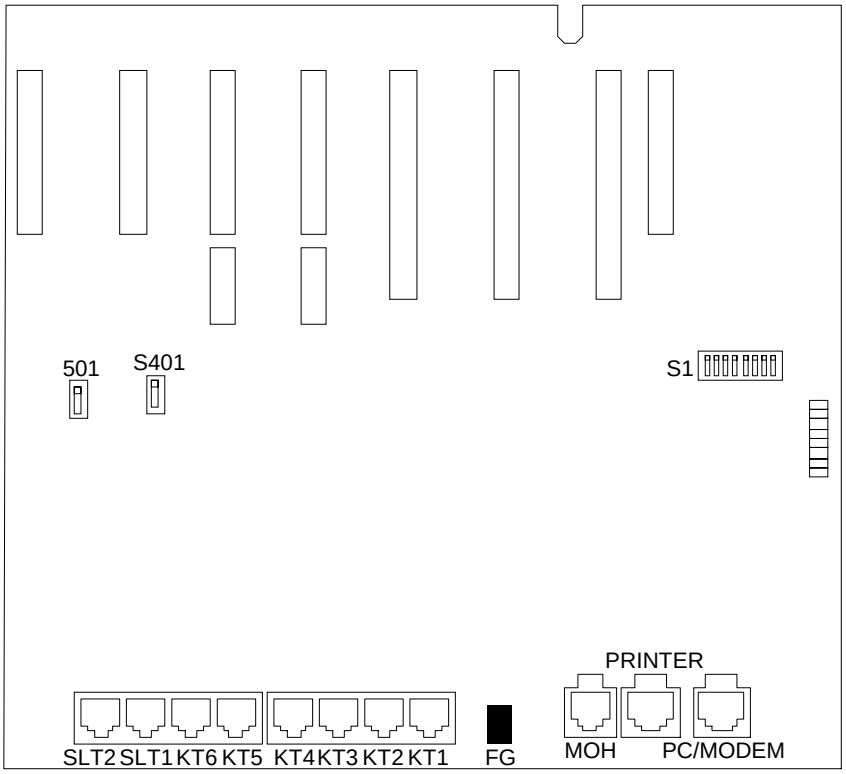

FIGURE 6. VS-MAIN MOTHERBOARD CARD

VS-PWSU Power Supply

The VS-PWSU power supply is the main power source for the ADIX-VS system. It generates the DC voltages required for system operation. In addition it includes the ring generator voltage for the single-line ports. The DC output voltages of the power supply are +5 Vdc and +27 Vdc. These voltages are converted from the 120 Vac commercial power supply or the +24 Vdc emergency backup battery at the main power supply unit.

The VS-PWSU is mounted with four screws in the VS-KSU. The VS-PWSU connecting cable is connected with the VS-MAIN (CN2). The VS-PWSU must be grounded to a dedicated ground terminal on the VS-MAIN.

System Power Supply Specifications

Model: VS-PWSU
Part No.: 057002

Input Requirement:
120±12Vrms,50-60Hz
Output:
5VDC/max3.5amps for transistor logic
27VDC/max2.6amps for talk battery, relay and key telephone
Ring Generator Output:
198 Vpp, 83 Vrms

BTU:
Circuit Protection:
F1 250V, 5amp fuse
F2 250V, 6amp fuse
F3 250V, 5amp fuse
Connectors:
CN6 To Motherboard(VS-MAIN)
BAT1 To Battery
BAT2 To Battery
CN1 To AC INPUT

CN6						
1	2	3	4	5	6	7
PF	GND(5V)	5V	27V	GND(27)	NC	NC

PF = Power Failure signal

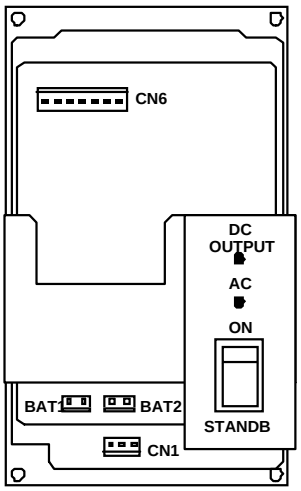

FIGURE 7. VS-PWSU POWER SUPPLY

VS-CPU/MEM Central Processor Unit

The VS-CPU/MEM card contains all of the on-board RAM for the system database. Make sure that a battery is connected to the VS-CPU/MEM card when turning off the system power or removing the card from the KSU.

Model: VS-CPU/MEM

Part No.: 057003
Location: Card slot No.1
Clock: 25 MHz
Flash Memory: 4 Mbytes(MB System, MB Database)
RAM: 2 Mbytes
On-Board Functions:
S1 Default Condition

S2 System Reset
Indicators:
D0 flashing=memory clear
Off=normal run
D1 flashing=system active
solid=system idle

Additional Power Requirments:
None
Connectors CN1001 Motherboard(VS-MAIN)
BATT Nickel-Cadmium Battery
CN1003 (Not used)
Memory Retention:
Nickel-Cadmium Battery,
minimum days
Size: 9.5"H× 3.9"W× 1.9"D

Weight: 4.25 oz

ADIX-VS LED Indication

No.	Name	Color	Definition
1	LED#0	Green	Idle state indication (Idle: on)
2	LED#1	Green	Status of the software (see chart below)
3	LED#2	Green	Status of the software (see chart below)
4	LED#3	Green	Status of the software (see chart below)
5	LED#4	Green	Status of the software (see chart below)
6	Minor Alarm	Red	Minor alarm indication
7	Major Alarm	Red	Major alarm indication
8	Memory Clear	Green	Memory clear indication

The table below lists the function of each LED indicator:

<table>
<tr><th>LED Indicator</th><th>Function</th></tr>
<tr><td>MEMORY CLEAR</td><td>Indicates the system memory has been reset to the default value.</td></tr>
<tr><td>MAJOR ALARM</td><td>Indicates a major software malfunction. The system may still be operational. Possible causes include an AC power problem, RF interference, a defective ROM or defective cards in the ADIX-VS.</td></tr>
<tr><td>MINOR ALARM</td><td>Indicates a minor software malfunction. The system may still be operational. The CPU files an error log for a later check. Possible causes included defective hardware or incorrect port definitions.</td></tr>
<tr><td>CODE 0-4</td><td>Indicates the system operating status, i.e., busy, idle, trunk access. It also indicates a defective EPROM position at start up according to the following sequence:
<table>
<tr><th colspan="5">CODE LED</th><th rowspan="2">Defective EPROM Number</th></tr>
<tr><th>4</th><th>3</th><th>2</th><th>1</th><th>0</th></tr>
<tr><td>N/A</td><td>off
off</td><td>off
off</td><td>off
on</td><td>on
off</td><td>ROM 1L / UU1 *
ROM 1U / UM1 *</td></tr>
<tr><td>N/A</td><td>off
off</td><td>off
on</td><td>on
off</td><td>on
off</td><td>ROM 2L / LM1
ROM 2U / LL1</td></tr>
<tr><td>N/A</td><td>off
off</td><td>on
on</td><td>off
on</td><td>on
off</td><td>ROM 3L / UU2
ROM 3U / UM2</td></tr>
<tr><td>N/A</td><td>off
on</td><td>on
off</td><td>on
off</td><td>on
off</td><td>ROM 4L / LM2
ROM 4U / LL2</td></tr>
<tr><td>N/A</td><td>on
on</td><td>off
off</td><td>off
on</td><td>on
off</td><td>ROM 5L / UU3
ROM 5U / UM3</td></tr>
<tr><td>N/A</td><td>on
on</td><td>off
on</td><td>on
off</td><td>on
off</td><td>ROM 6L / LM3
ROM 6U / LL3</td></tr>
<tr><td>N/A</td><td>on
on</td><td>on
on</td><td>off
on</td><td>on
off</td><td>ROM 7L / UU4
ROM 7U / UM4</td></tr>
<tr><td>N/A</td><td>on
off</td><td>on
off</td><td>on
off</td><td>on
off</td><td>ROM 8L / LM4
ROM 8U / LL4</td></tr>
</table>
* The LED indicators may not function depending on the type EPROM error.</td></tr>
</table>

Switch S1001 Function

No.	Name	Function
1	Memory Clear	OFF = Database Protect ON = Database Default
2	ROM Sum Check	ON: No Check, OFF: Check (Normal)
3	Not Used	
4	Not Used	
5	Mode	ON: Program Loader, OFF: Normal

Reset Button S1002

System reset button.

☞ **To default the system database using the VS-CPU/MEM card:**

1. Make sure all cards and station terminals are properly connected and powered up.
2. Set position 1 of switch S1001 on the VS-CPU/MEM card to the OFF posistion.

   Note: Position 2, 3, and 4 must be OFF.

3. Press the red reset button labeled RESET(Sw1002).
4. When CLR LED on the VS-CPU/MEM card begins to flash, return position 1 of switch SW1001 on the VS-CPU/MEM card to the ON position.

Note: SW1002 must be turned on while the LED is flashing.

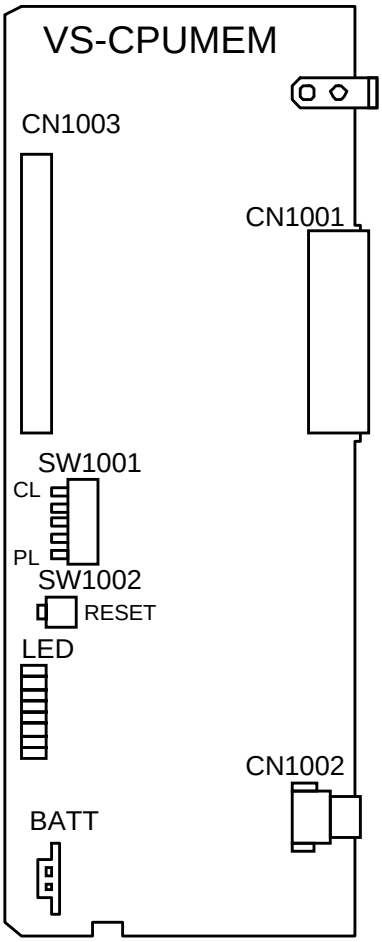

FIGURE 8. VS-CPU/MEM CARD

VS-2CITK Loop Start Trunk Card for Caller ID

The VS-2CITK card interfaces up to two trunk ports to loop start central office/PBX circuits that provide Caller ID service. This card is required to use the Caller ID feature.

Model: VS-2CITK
Part No.: 057005
Location: Any trunk card slot
Ports: 2 per card
Circuit Protection:
Metal Oxide Varistors VA102-VA204,
Threshold Voltage: 200V
Circuit Protection 2:
Possitors / Ressistors
Additional Power Requirements:
None

Connectors:
CNHB,CNSG Motherboard(VS-MAIN)
CNCO Trunks
On-board Functions:
SW101-SW201 Long(0dB)/Short(3dB)distance selection
SW102-SW201 600/900 Ohm impedance selection
SW103-SW203 Not Used-Set to U
Indicators: None
Software Settings:
Class 01.04:polarity,disconnect signal detection
Indicators: None
Size: 7.5"H× 3.9"W× 1.9"D
Weight: 5.5 oz

VS-2CITK Card Pin-Out

CITK	Modular Jack Number	MDF Pin Number	CM Wire Color	RJ11 Jack Pin Number	RJ11 Jack Wire Color
1T	1, 3, 5	1	W-BL	3	GN
1R		2	BL-W	2	R
2T	2, 4, 6	5	W-GN	3	GN
2R		6	GN-W	2	R

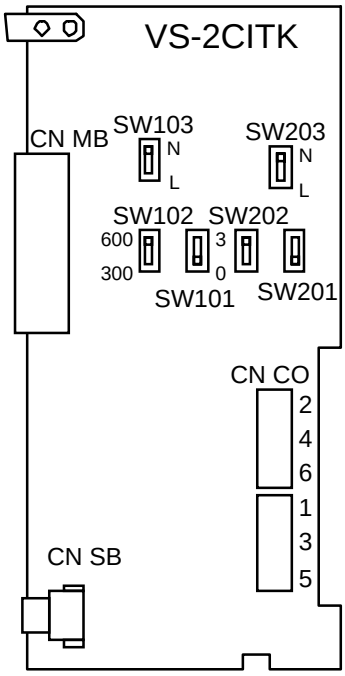

FIGURE 9. VS-2CITK CARD

VS-ICOTB ISDN BRI Interface Card

The VS-ICOTB card interfaces one ISDN BRI (Basic Rate Interface) trunks to the ADIX-VS. A maximum of two VS-ICOTB cards may be installed in the ADIX-VS system. Each ISDN BRI trunk consists of two B channels and one D chanenel.

Model: VS-ICOTB
Part No.: 057004
Location: Any trunk card slot
Ports: 3 channels per card

Circuit Protection: VA1-VA6
Metal Oxide Varistors
Thresholed Voltage: 240V
Circuit Protection 2: Buss Fuse F1 – F4 @
250V / 600 mA Slow Blow
Additional Power Requirements:
None

Connectors:
CN1,CNSG Motherboard(VS-MAIN)
CN4 BRI Circuit
On-board Functions: None
Indicators: None
Software: Settings:
Class 01.04:Operation Mode,
Channel Type,Interface Type,
Indicators: None
Size: 7.5 "H× 3.9"W× 1.9"D
Weight: 3.1 oz

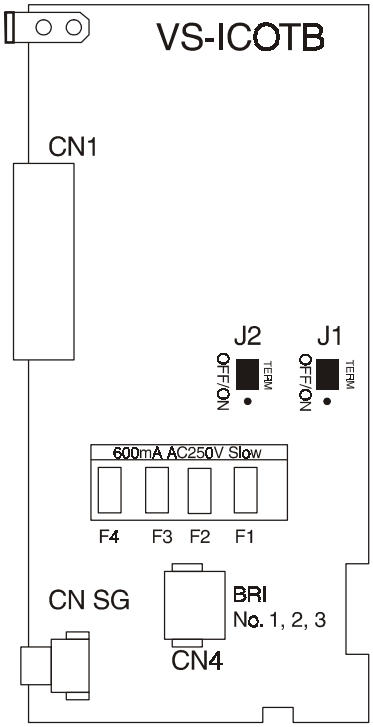

FIGURE 10. VS-ICOTB ISDN BRI INTERFACE CARD

VS-4PSUB Digital Station Card

The VS-4PSUB card interfaces ADIX digital station terminals to the VS-KSU. Each circuit of the VS-4PSUB card is star connected to an ADIX digital telephone using #22/24 AWG one-pair twisted cable. Single-pair cable allows for bi-directional data transmission or ping-pong transmission.The loop limit of ADIX digital station terminals is 1000 feet.

Model: VS-4PSUB
Part No.: 057006
Location: Any station card slot
Ports: 4 per card
Loop Limit: 1000 feet
Circuit Protection1: VA101-VA402,VA1
Metal Oxide Varistors
Thresholed Voltage: 85V
Protection2: Possitor/Themistors PTH101-PTH401
Additional Power Requirements:
None

Compatible Station Terminals:
IX-12KTS-2/KTD-2,IX-VTA
Connectors:
CNM/B,CNSG Motherboard(VS-MAIN)
CNKT Station teminals
On-board Functions: None
Indicators: None
Size: 3.9"H× 4.5"W× .875 "D
Weight: 4.1 oz

VS-4PSUB Pin-Out

Modular		RJ11 Jack		MDF	CM
Jack Number	4PSUB	Pin Number	Pin Number	Wire Color	Wire Color
KT 9/13	1PT	3	1	W-BL	GN
	1PR	2	2	BL-W	R
	FG	4	3	W-O	Y
	FG	1	4	O-W	BK
KT 10/14	2PT	3	5	W-GN	GN
	2PR	2	6	GN-W	R
	FG	4	7	W-BR	Y
	FG	1	8	BR-W	BK
KT 11/15	3PT	3	9	W-SL	GN
	3PR	2	10	SL-W	R
	FG	4	11	R-BL	Y
	FG	1	12	BL-R	BK
KT 12/16	4PT	3	13	R-O	GN
	4PR	2	14	O-R	R
	FG	4	15	R-GN	Y
	FG	1	16	GN-R	BK

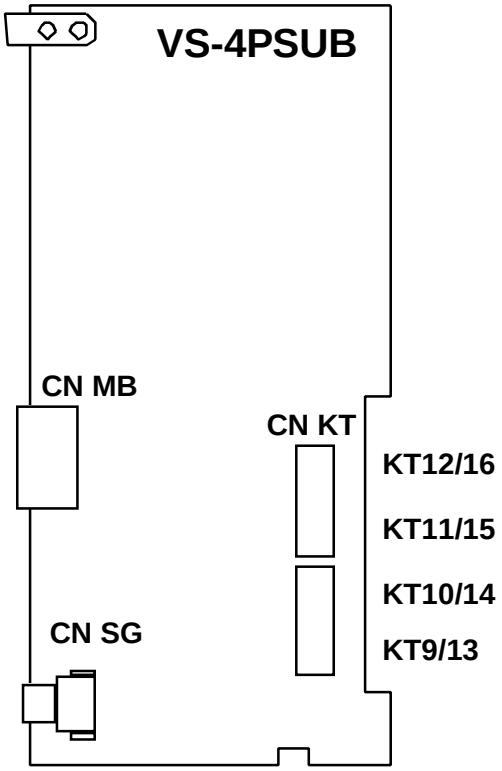

FIGURE 11. VS-4PSUB CARD

VS-MISC Card

The VS-MISC card interfaces the ADIX-VS miscellaneous ports to customer-provided devices to provide optional features.

The VS-MISC card provides five miscellaneous function ports. Miscellaneous functions include connection of background music(BGM),2 external page zones, remote control relays, and sensor input. Because the ADIX-VS system utilizes the same core software as the other ADIX systems, the VS-MISC card is configurated as 8 ports in programming. However only five funtional ports are available on the VS-MISC card.

The table below lists the physical port layout.

VS-MISC Card Physical Port Layout

Port	Function
1	Page Zone1 external
2	BGM Source
3	Not used
4	Relay Control
5	Sensor Input
6	Page Zone 2 external
7	Not used
8	Not used

Note: For information on connecting external devices to the VS-MISC card, please refer to the Optional Feature Installation Sectiion of this manual.

Paging. If the same amplifier is shared by paging and BGM sources, BGM is suspended at all zones when paging is activated. If SW2A-SW2C are set as 2-WIRE, the signal is bi-directional if the TA IN is connected and mono-directional if the PAGE OUT and TA IN are connected.

Model: VS-MISC
Part No.: 057008
Location: Any universal card slot
Ports: 5 per card
Additional Power Requirements: None

Connectors:
CN1,CNSG Motherboard(VS-MAIN)
CN2 Customer provide devices
On-board Functions: (See table)
Indicators: LED=Busy
Size: 3.9"H× 7.5"W× .75"D
Weight: 5.95 oz

On-Board Functions:

Switch	Description
MBSW	Make Busy. (Not support power-on maintenance)
SW2A,SW2B,SW2C	Select ON or OFF for paging amplifier connection ON= 2-WIRE OFF= 4-WIRE
BGSW	Select Y or N for BGM amplifier Y= USED N=UNUSED
SWBG1	Select ON or OFF for the paging zone 1
SWBG2	Select ON or OFF for the paging zone 2
NISW1	Not used
NISW2	Not used
NISW3	Not used
VR1	BGM volume adjustment
VR2	Not used

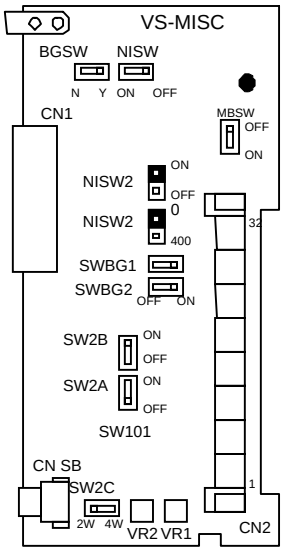

FIGURE 12. VS-MISC CARD

VS-VML

The VS-VML card provides 4 voice mail/auto attendant ports. This card is installed in slot 6 of the VS-MAIN motherboard.

Model: VS-VML

Part No.: 057015

Location: slot 6

Ports: 4 per card

Storage Capacity: up to 2 hours

Storage Medium: Flash Module
40 Meg standard

Processor Speed: 20 Mg Hz

Additional Power Requirements:
None

Connectors:

ACONN	Motherboard(VS-MAIN)
J2	PC/ Modem

On-board Functions:

MBSW – Make Busy Switch

Indicators: (See table)

Maximum Mailbox Capacity:
50 boxes(201-250)
System boxes and menus (900, 905, 975, 995)
Menu range 201 to 250

Message Folder Capacity:
New – 40 outside caller (48 total)
Saved – 48
Archived – 16
Deleted – 48
NO receipts

Size: 3.9”H× 7.5 “W × 0.75”D

Weight: 4.35 oz

Omega-Voice VMI Function LEDs

LED	Function	Indication
D1	Not Used	Not Used
D2	Hard Drive Active	Flashes when hard disk drive is in use.
D3	Communications Active	Flashes to indicate communication with VS-VML card through the serial port.
D4	Housekeeping Active	Flashes to indicate Housekeeping Function is active.

Port Status LEDs

LED	Voice Mail Port (Station Logical Port)	Indication
D6	VM/AA Port 1 (Station Logical 17)	OFF – Port Idle 50/ 50 Cycle – Audio Playing 75/ 25 – Audio Recording Steady – Port Active
D7	VM/AA Port 2 (Station Logical 18)	OFF – Port Idle 50/ 50 Cycle – Audio Playing 75/ 25 – Audio Recording Steady – Port Active
D8	VM/AA Port 3 (Station Logical 19)	OFF – Port Idle 50/ 50 Cycle – Audio Playing 75/ 25 – Audio Recording Steady – Port Active
D9	VM/AA Port 4 (Station Logical 20)	OFF – Port Idle 50/ 50 Cycle – Audio Playing 75/ 25 – Audio Recording Steady – Port Active

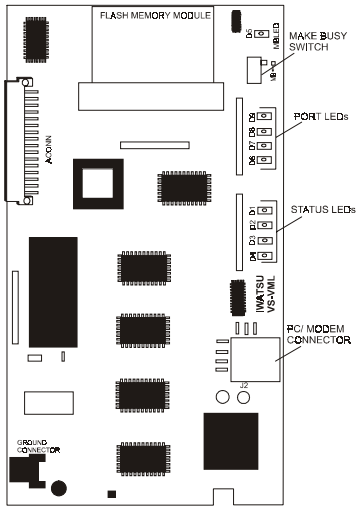

FIGURE 12. VS-VML CARD

Chapter 2 •

Station Equipment

Key Telephones and Attendant Positions

There are three types of digital telephones designed to work with ADIX-VS. Each of these phones have four fixed feature buttons and eight programmable feature buttons. The four fixed feature buttons are permanently labeled as Speaker [SPKR], Transfer [TRAN], Feature [FEAT], and Hold/Do Not Disturb [HOLD/DND]. They can, however, also be reprogrammed.

Digital Telephone Components Figure 13 points out the components of ADIX digital telephones. The table that follows lists certain components and a brief description of their function.

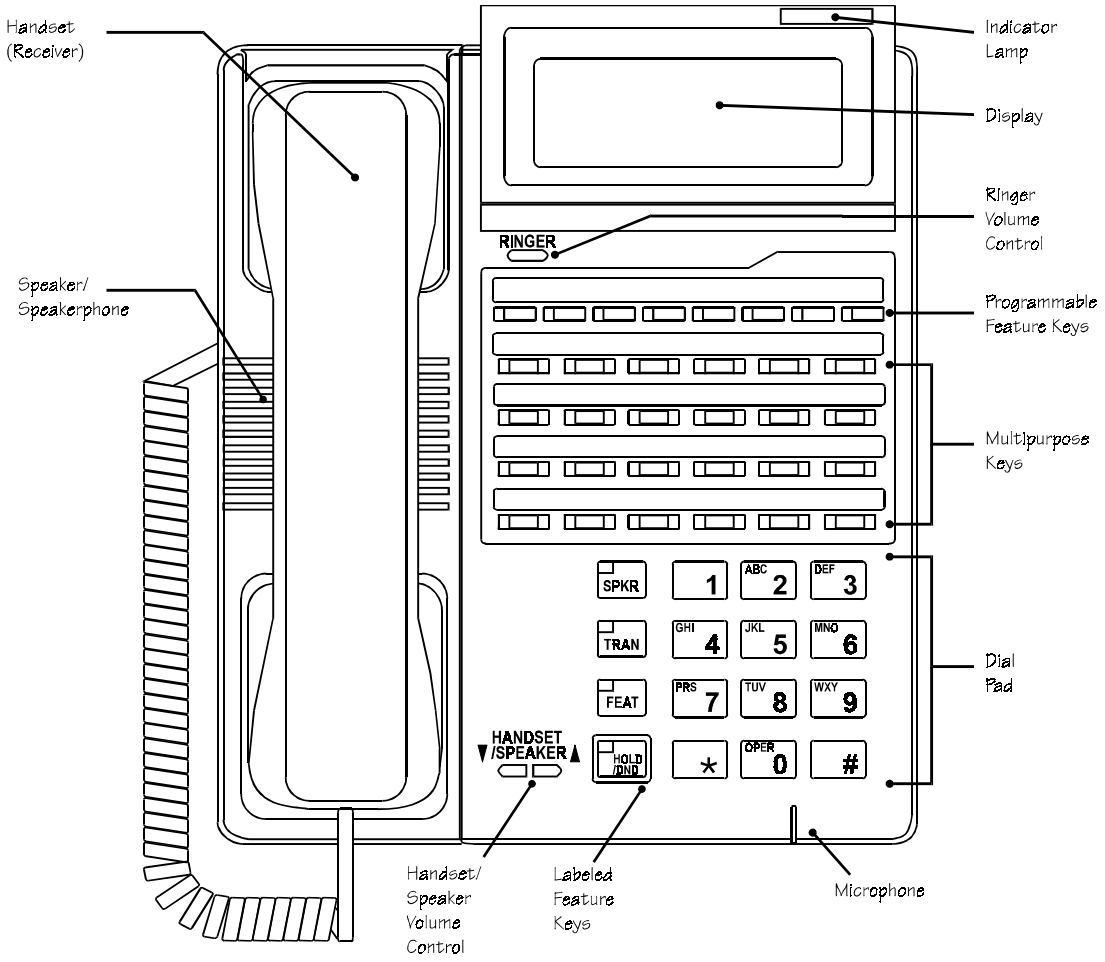

FIGURE 13 DIGITAL TELEPHONE COMPONENTS

Component	Description
Multi-Purpose Buttons	Programmable for a specific functions. For example, outside trunks, individual extensions, one-touch feature operation.
Button Lamps (LED)	Light up or flash when someone is using a line or a feature corresponding to that button. **Green Lamp** - You are using that line. **Red Lamp** - Someone else is using that line.
SPKR (Speaker)	Transfer audio output from handset to speaker.
TRAN (Transfer)	Transfer a call from your phone to another extension.
FEAT (Feature)	Operate certain special and advanced features available through ADIX.
HOLD/DND (Hold/Do Not Disturb)	Put a call on hold, or set the do not disturb function to prevent any calls from ringing at your extension.
Handset/Speaker Volume Control	The left button lowers the handset or speaker volume, the right button raises it.
Ringer Volume Control	Adjust the ringer volume to one of four levels.
MIC OFF	When the [MIC OFF] button LED is illuminated the station microphone is inactive. When the [MIC OFF] button LED is extinguished the station microphone is active.
ICM	Pressing the [ICM] button connects you to an intercom line for conversation with another extension.

IX-12KTS-2 Digital Multiline Telephone

The IX-12KTS-2 Digital Multiline Telephone has four fixed feature keys and 8 multipurpose keys with red LEDs and 12 multipurpose keys with red and green LEDs. Twelve multipurpose keys may be added to the IX-12KTS-2 with the addition of an IX-ELK key expansion module. This unit is equipped with a built-in speakerphone.

Models: IX-12KTS-2
Order No.: Gray - 104210

Ash - 104212
Features: 4 fixed feature keys, 8

multipurpose keys with red LEDs, 12 multipurpose keys with red and green LEDs

Options: loud ringer/external speakerphone, autodial unit, busy bypass unit, headset adapter, pedestal, noise canceling handset, amplified handset

Related Hardware: 1 VS-4PSUB port

Size: 9.0”H x 8.2”W x 4.0”D
Weight: 2.0 lbs.

FIGURE 14. IX-12KTS-2, GRAY AND ASH

IX-12KTD-2 Digital Multiline Telephones

The IX-12KTD-2 Digital Multiline Display Telephone offers all the functionality of the IX-12KTS-2 with the addition of a 2-line, 16 characters per line liquid crystal display and an incoming call indicator lamp. This display is very helpful for using advanced features and for providing status information. The oversized indicator lamp flashes red for incoming calls and green for a programmable feature such as message waiting.

Models:	IX-12KTD-2
Order No.:	Gray - 104200 Ash - 104202
Features:	4 fixed feature keys, 8 multipurpose keys with red LEDs, 12 multipurpose keys with red and green LEDs
Options:	loud ringer/external speakerphone, autodial unit, busy bypass unit, headset adapter, pedestal, noise canceling handset, amplified handset
Related Hardware:	1 VS-4PSUB port
Size:	9.0”H x 8.2”W x 4.0”D
Weight:	2.0 lbs.

FIGURE 15 IX-12KTD-2 WITH IX-12ELK, GRAY AND ASH

IX-DCKT900 Digital Cordless Key Telephones

The IX-DCKT900 Digital Cordless Key Telephone is designed to work with the Omega-Phone ADIX-VS system. It is engineered to provide top-notch performance, reliable service and long life.

The IX-DCKT900 must be connected to both the telephone line and an ADIX Omega-Phone digital telephone. For installation instructions see the IX-DCKT900 Owner’s Manual (Part Number 109330).

Model:	IX-DCKT900
Order No.:	109300
Features:	Listed Below
Frequency Control:	Direct Sequence Spread Spectrum
Modulation:	MSK
Operating Temperature:	-10° to 50° C
Frequency:	902 to 928 Mhz (9 Channels)
Power Rating:	100 Milliwatts

Handset Specifications:

Power:	Rechargeable Ni-Cad Battery Pack
Size:	2 1/8 in. W X 7/8 in. D X 6 1/2 in. H with antenna
Weight:	Approx. 10.5 oz. with battery
Battery:	Capacity: 400 mAh, 4.8V Talk Mode: 3 hours (typical) Standby Mode: 42 hours (typical)
Color	Black
Options:	Belt Clip, Backup Power Supply,

Base Unit Specifications:

Power:	10V DC from supplied AC Adapter
Size:	7 3/4 in. W X 7/8 in. D X 3 5/32 in. H
Weight:	Approx. 1 lb., 3 oz.
Color	Black

Related Hardware: Headset, Vibrator, Leather Case, Extended Life Battery, Wall Mount Bracket

1 VS-4PSUB port, IX-12KTD-2, IX-12KTS-2, IX-VTA

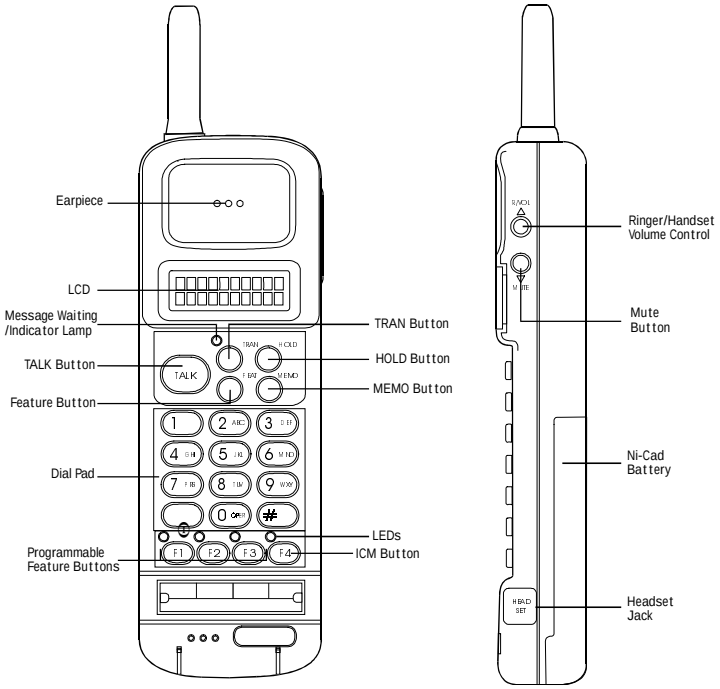

FIGURE 16. IX-DCKT900

Message Waiting/Indicator Lamp — Flashes when you have a message waiting. Lights when the TALK button is pressed.

TALK Button — Press the TALK button to go off hook when making or answering a call.

FEAT (Feature) Button — Press the FEAT button to operate ADIX-VS system features.

TRAN (Transfer) Button — Press the TRAN button to transfer a call from your telephone to another extension.

HOLD Button — Press the HOLD button to put the current call on hold or set the Do Not Disturb feature.

MEMO (Memory) Button — The MEMO button is used to store in memory and access up to 20 numbers and feature access codes.

Programmable Feature Buttons (F1-F3) — The key assignment of the F1, F2 and F3 buttons corresponds to the programming of the first three multipurpose buttons on the Host Telephone.

ICM Button (F4) — The ICM (F4) button allows you to access the other system extensions.

LEDs — The four LEDs correspond to the F1-F4 buttons. An LED will light or flash when the line or feature of the corresponding button is in use.

Ringer/Handset Volume Control — Use this button to select the ringer volume and the handset volume.

IX-DDPH Digital Doorphone

The IX-DDPH digital doorphone allows visitors to make an intercom call to gain entrance to your building. This unit is connected to a VS-4PSUB port using #22 AWG one-pair twisted wire. One of four doorphone chime tones can be selected through database programming.

Model:	IX-DDPH	**Options:**	None
Order No.:	076900	**Related Hardware:**	1 VS-4PSUB port
Features:	Call button, microphone	**Size:**	5.3"H x 4.0"W x 2.0"D
		Weight:	0.7 lbs.

FIGURE 19. ADIX DIGITAL DOORPHONE

IX-COMLINK TAPI-Compliant Computer Telephony Interface Adapter

IX-COMLINK is a TAPI-compliant Computer Telephony Interface Adapter that combines the features available with your ADIX-VS digital telephone and the information processing power of your PC. This device provides a TAPI (Telephony Application Programming Interface) compliant interface that can operate as a stand-alone voice terminal or in parallel with an ADIX Digital Key Telephone. This device supports standard TAPI functions as well as TAPI “extended” features which provide access to ADIX-VS features. It is connected to a VS-4PSUB port using #22 AWG two-pair twisted wire. This unit has jacks for an ADIX-VS Digital Telephone, Headset, Handset/Cradle, and modem.

FIGURE 20. IX-COMLINK

PC Requirements

- Microsoft® Windows® 3.11 or Windows® 95 Operating System.
- A 486 or higher Microprocessor.
- Follow Microsoft® recognized RAM requirements. For Windows® 3.11 a minimum of 4MB of RAM (8MB recommended). For Windows® 95 a minimum of 8MB of RAM (16MB recommended). Additional RAM may be required for your Computer Telephony application.
- A 3.5 inch floppy disk drive.
- At least 1MB of free hard disk space for IX-COMLINK drivers. Additional hard disk space is required for your Computer Telephony application.
- Color Monitor with at least 480 x 640 Resolution.
- An RS232C COM port.

ADIX-VS Requirements

- An ADIX-VS digital station port.
- 24 AWG twisted-pair cable to establish the connection between the ADIX-VS system and the IX-COMLINK location.

Power Supply Requirements

The IX-COMLINK consumes the same amount of power as an ADIX-VS digital telephone. An IX-COMLINK operating with an ADIX digital telephone connected, consumes the same amount of power as two ADIX digital telephones. The chart below lists the maximum number of IX-COMLINK units and digital telephones the system power supply will support.

IX-COMLINK Contents

Before proceeding with the installation of your IX-COMLINK computer telephony interface adapter, make sure you received the following components in the box:

- IX-COMLINK Computer Telephony Interface Adapter (Part Number 104665)
- Six-pin modular cord
- IX-COMLINK SPI, TAPI Driver Installation Disk (Part Number 109175)
- DB9 female/DB9 female serial cable (Part Number 107515)

Optional Equipment

You may also be installing or connecting the following optional equipment:

- IX-CTH/C Handset and Cradle with Hookswitch
- ADIX-VS IX-12KTD/S-2 (w or w/o IX-ELK) Digital Key Telephone
- ADIX-VS IX-24KTD/S Digital Key Telephone
- Headset
- Modem
- Sound Card or PC Speakers
- Microphone

Connection Options

IX-COMLINK by itself, is not a communication device. However, by connecting your computer to one of the following primary communication devices, its design offers a full range of Computer Telephony (TAPI) features. There are also connectors provided to allow the use of a modem for outgoing calls and Line In/Out jacks for connection of a sound card or PC speakers if supported by your application software. Strapping options are provided to select the primary communication device used with IX-COMLINK.

Primary Communication Devices

Only one primary communication device may be connected at a time. Simultaneous connection of multiple primary communication devices is not supported.

- An IX-12KTD/S-2 ADIX-VS Digital Telephone may be connected to the KT connector. The ADIX digital telephone operates in parallel with IX-COMLINK.
- The IX-CTH/C Iwatsu Handset and Cradle with Hookswitch may be connected to the HANDSET connector
- A headset (compatible with ADIX telephones) may be connected to the HEADSET connector.

Optional Communication Devices

- A connection from the modem LINE jack to the IX-COMLINK MODEM jack may be used for originating outgoing calls.
- A SoundBlaster™ or SoundBlaster™-compatible PC sound card or PC speakers may be connected to the LINE IN/LINE OUT connectors. The speakers must be amplified when connected directly to the IX-COMLINK LINE IN/LINE OUT connectors. **Note:** IX-COMLINK is not compatible with all sound cards.

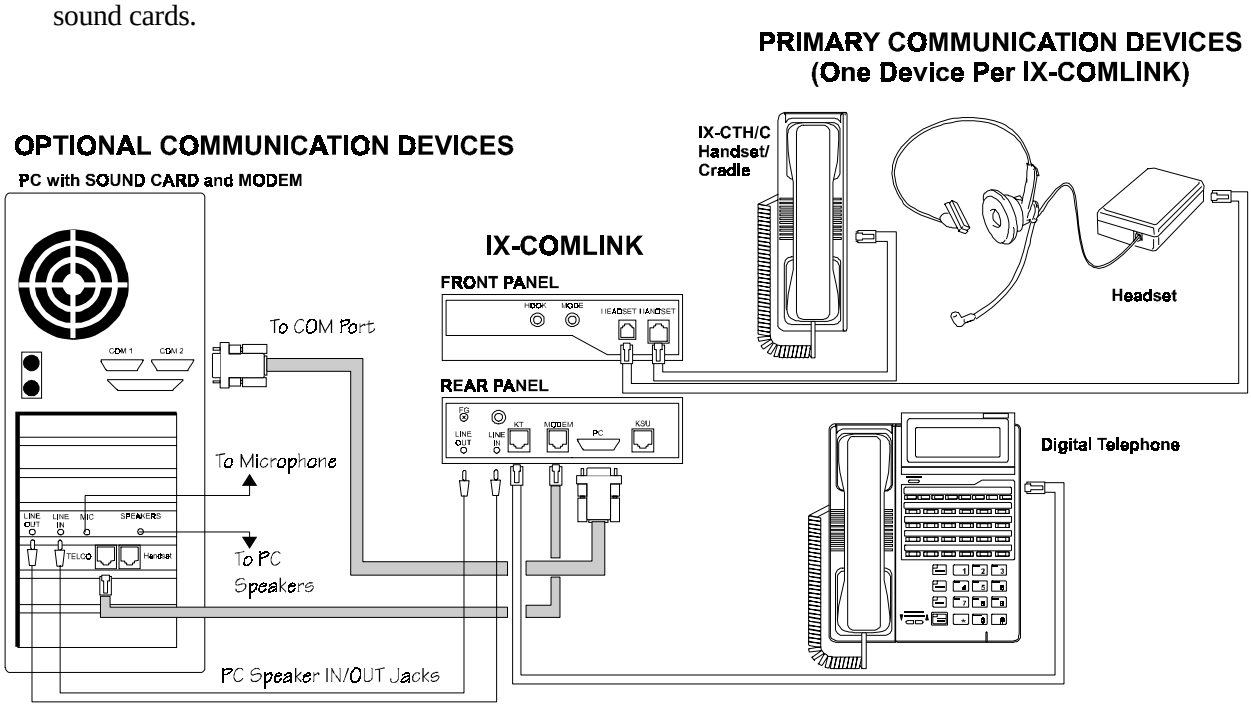

FIGURE 21. IX-COMLINK CONNECTION OPTIONS

Front And Rear Panel Layout

The drawing below illustrates the location of each IX-COMLINK connector.

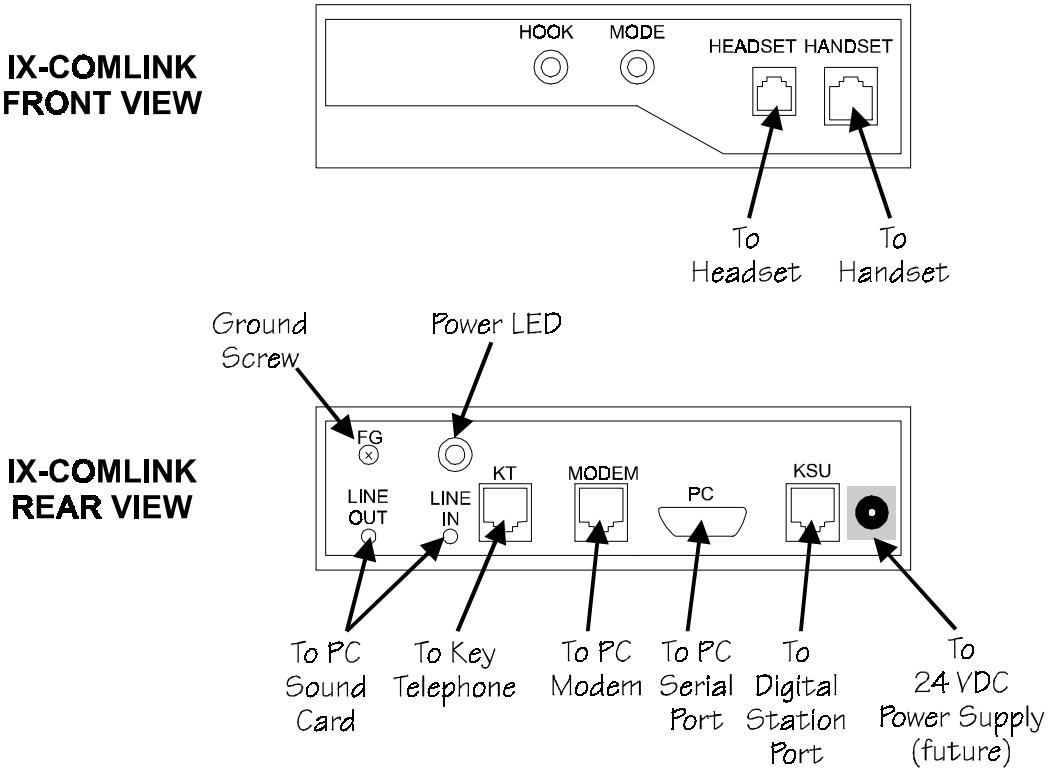

FIGURE 22. IX-COMLINK CONNECTORS

Side Panel Layout

The drawing below illustrates the IX-COMLINK side panel. These connectors and switches are reserved for future use.

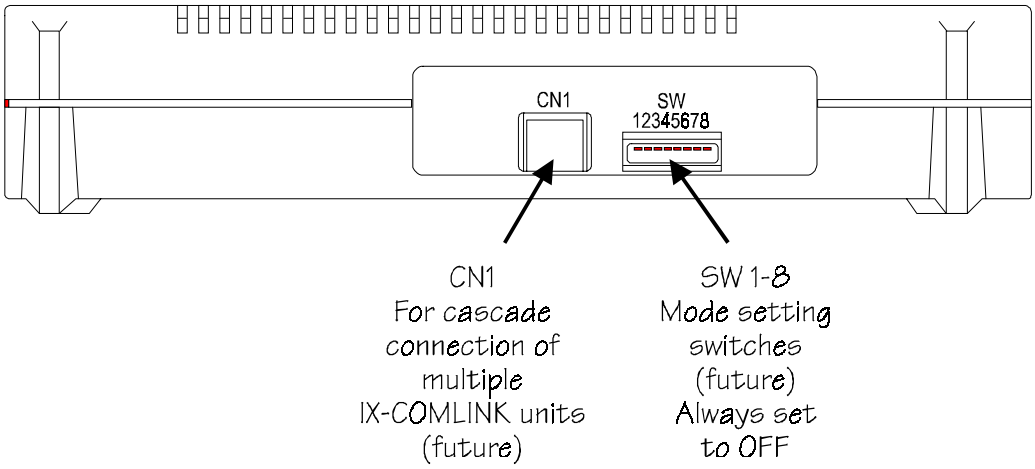

FIGURE 23. IX-COMLINK SIDE PANEL

Connectors

The table below provides an overview of each IX-COMLINK connector:

Connector	Type	Description
KSU	6-pin RJ11	Connection to an IX-8PSUB-1, IX-408, or IX-044 digital station port. Required to operate the IX-COMLINK. This port may be shared with an ADIX Digital Telephone or a stand alone port.
PC	DB9 Male	Connection to the RS232C port of the PC. Required to operate the IX-COMLINK.
MODEM	6-pin RJ11	Connection to a PC modem LINE jack. The modem may only be used to make an outgoing call. When the modem is in use, no other devices connected to IX-COMLINK may be used for call processing. The ADIX LCD will display "BUSY!" when the modem is in use.
KT	6-pin RJ11	Connection to an IX-12KTD/S-2 (w or w/o IX-ELK) or IX-24KTD/S Digital Key Telephone. An optional headset may be connected to the digital telephone.
LINE IN / LINE OUT	Audio Jack	Connection to a PC Sound Card or PC Speakers. The functionality of the sound card is dependent upon the capabilities of the computer telephony application and the sound card.
FG	Screw	Ground wire connection. Ground wire connection is not required for normal operation. FG provides a connection to ground the chassis of the PC connector when utilizing a shielded RS232 cable.
24V DC	Power Jack	Connection for Optional External Power Supply. (Not Used, Future) This connector is currently covered, but will be used for locally powering the IX-COMLINK unit with a 24VT DC (100ma) AC to DC power converter in the future.
HEADSET	4-pin RJ11	Connection of a headset for stand alone operation. Requires a change to jumpers JP1 and JP2 on the IX-COMLINK circuit board. If an ADIX Digital Telephone is connected to IX-COMLINK, this connector will not function. Both a headset and handset cannot be connected at the same time.
HANDSET	6-pin RJ11	Connection of an IX-CTH/C Handset/Cradle for stand alone operation. If a digital telephone is also connected, this connector will not function. Both a handset and headset cannot be connected at the same time.
CN 1	8-pin RJ11	Connection to cascade IX-COMLINK units. (Not Used, Future)

Overview of LEDs and Switches

Hook LED

This LED is the primary hook switch status indicator. This LED does not provide indication when IX-COMLINK is ringing.

Status	Description
ON	IX-COMLINK is busy, off-hook on a conversation.
OFF	IX-COMLINK is idle or ringing.

Mode LED

This LED provides audio status indication. It only functions when the Hook LED is lit.

Status	Description
OFF	Digital Key Telephone is in use.
SOLID	IX-CTC/H Handset/Cradle or Headset connected to HEADSET jack is in use.
SLOW FLASH	Microphone connected to PC Sound Card is in use. (0.8 sec. On / 0.2 sec. Off)
FAST FLASH	Modem is in use. (0.1 sec. On / 0.1 sec. Off)

Switch 1-8 (Not Used)

Switches 1-8 must remain in the OFF position (factory setting).

PC Interface

There are three possible interfaces between PC and IX-COMLINK:

- The PC serial interface.
- The audio interface.
- The modem interface.

PC Serial Interface. This is the primary connection between the IX-COMLINK and your computer. The PC serial interface is used to send control data between the PC and the IX-COMLINK.

Audio Interface. If a sound card is connected to the IX-COMLINK LINE IN jack, a device driver is required to control audio through the sound card. This device driver is supplied by the sound card and/or computer telephony application manufacturer. The computer telephony application software must also support this capability. These drivers are not included with the IX-COMLINK Installation Disk.

Modem Interface. A device driver is required to control the PC modem. Iwatsu recommends using Unimodem (/V) if the application uses TAPI for controlling the modem. Also for controlling the modem, the application must use a driver which supports the modem. Unimodem (/V) is included with Windows® 95 or available from Microsoft Corporation.

Single-Line Telephones

Industry standard single-line telephones (either 500 or 2500 type) can be connected as on-premise or as off-premise extensions. Single line connection varies depending on the type of SLT, the location and the usage. The loop resistance of SLTs connected to the ADIX is 600 ohms. #24 AWG one-pair twisted wire is required.

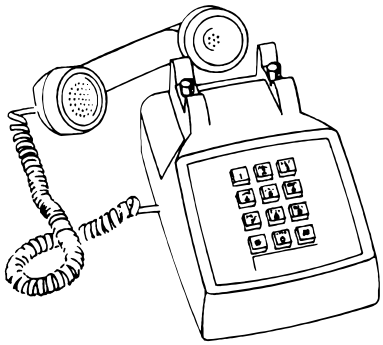

FIGURE24. SINGLE-LINE TELEPHONE

Optional Station Equipment

The following components may be added to the ADIX station terminals.

IX-SNHD Noise Canceling Handset

The IX-SNHD station noise canceling handset provides comfortable conversation in noisy areas for the ADIX telephones.

Model: IX-SNHD
Order No.: 105410

IX-SHHD Station Amplified Handset

The IX-SHHD station amplified handset provides acoustic receiving voice amplification for the hearing impaired.

Model: IX-SHHD
Order No.: 105420

IX-SSHD Standard Handset

The IX-SHHD is the factory equipped handset of all Iwatsu telephones. It can be used with a hearing aid device that uses a magnetic pick-up coil.

Model: IX-SSHD
Order No.: 106581

IX-SSPU Station Speakerphone Unit

The IX-SSPU station speakerphone unit is an add-on to the ADIX digital multiline telephones. This unit must be installed to used the hands-free conversation feature on outside line calls to the ADIX telephones. This unit cannot be added to the IX-VT Versa-Phone.

Model: IX-SSPU
Order No.: 105110

IX-LRSP Station Loud-Ringer / External Speakerphone Adapter

The IX-LRSP allows the connection of an ADIX digital telephone to a station loud-ringer or external speakerphone adapter. This unit cannot be connected to a Versa-Phone.

Model: IX-LRSP
Order No.: 105120

IX-AUTD Autodial Unit

The IX-AUTD station autodial unit is an add-on to the ADIX digital multiline telephones This unit adds 16 keys that can be programmed for speed dial or DSS usage.

Model: IX-AUTD
Order No.: 105010

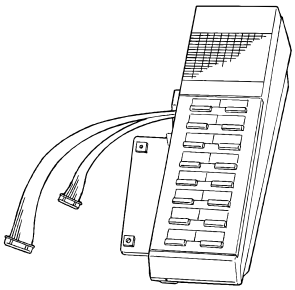

FIGURE 25. IX-AUTD AUTODIAL UNIT

IX-BPAD Busy Bypass Unit

The IX-BPAD station busy bypass/autodial unit is an add-on to the ADIX digital multiline telephones. With this unit, a station can use the busy bypass calling feature. The 16 additional keys can be programmed for speed dial or DSS usage. This unit requires one VS-4PSUB port.

Model: IX-BPAD
Order No.: 105020

FIGURE 26 IX-BPAD BUSY BYPASS/AUTODIALER UNIT

IX-PHSAD Station Headset Adapter

The IX-PHSAD station headset adapter/autodial unit is an add-on to the ADIX digital multiline telephones It adds a headset adapter and 16 keys that can be programmed for speed dial or DSS usage.

Model: IX-PHSAD
Order No.: 105030

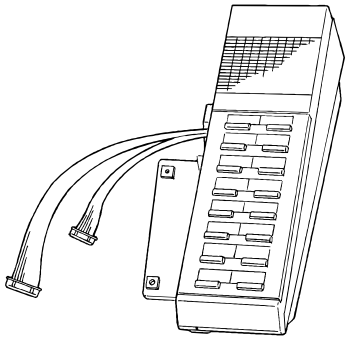

FIGURE 27. IX-PHSAD STATION HEADSET ADAPTER/AUTODIALER UNIT

IX-STPD Station Pedestal

The IX-STPD station pedestal/wall mount is used to wall mount or increase the angle of an ADIX digital multiline telephone.

Model: IX-STPD
Order No.: 105210

IX-VTPD Station Pedestal

The IX-VTPD station pedestal/wall mount is used to wall mount or increase the angle of an IX-VT Versa-Phone.

Model: IX-VTPD
Order No.: 105220

IX-ADPD Station Pedestal

The IX-ADPD autodial pedestal/wall mount is used to wall mount or increase the angle of an IX-AUTD autodial unit.

Model: IX-ADPD
Order No.: 105230

IX-SREP Station Loop Extender

The IX-SREP star repeater is used to extend the loop limit (distance) from the KSU to an ADIX digital telephone, DSS unit, attendant console, or digital doorphone. One star repeater extends the loop limit to 1,500 feet. The second star repeater extends the loop limit by an additional 6,500 feet to a maximum distance of 8,000 feet from KSU to station. An IX-SRWPS is required for local power.

Model: IX-SREP
Order No.: 101560

On-Board Functions

SW1-Operation Mode
SW2-Without Local Power (IX-SRPWS)
SW3-With Local Power (IX-SRPWS)

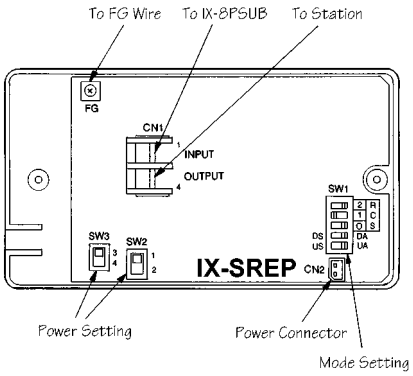

FIGURE 28. IX-SREP STAR REPEATER

IX-SRPWS Power Supply

The IX-SRPWS star repeater power supply is used to provide local power for loop limit expansion using one or two IX-SREPs.

Model: IX-SRPWS
Order No.: 100470

Miscellaneous Station Equipment

Part No.	Description
107110	IX-KT Strapping Jack
107340	ADIX 16 ft. Handset cord
107350	ADIX KT Handset Clip

Section 3 •

ADIX-VS Installation

ADIX-VS Physical Port Layout

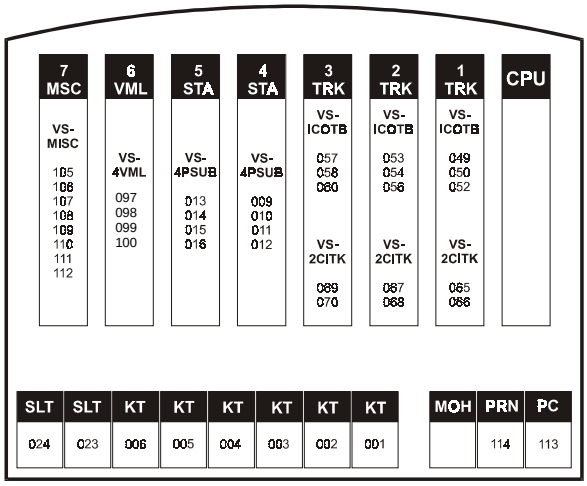

ADIX-VS Logical Port Layout

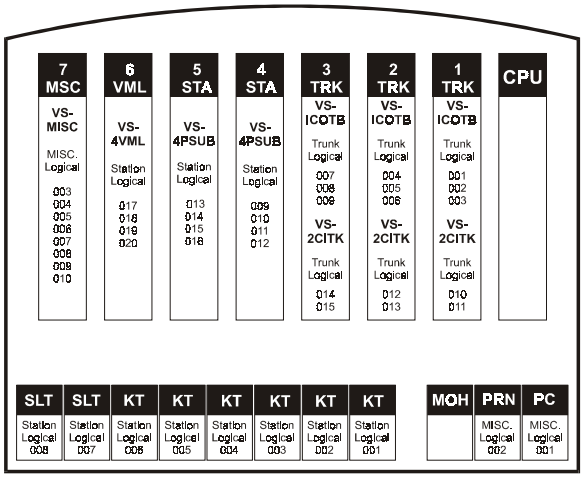

ADIX-VS Installation

This section describes the installation of the ADIX-VS system. Inspect all system components before beginning the installation process.

VS-KSU

The VS-KSU is powered by an internally mounted VS-PWSU power supply. It contains dedicated card slots for the VS-CPU/MEM card,three trunk interface cards, two station cards, and two universal card slots. In addition, it provides jacks for 6 digital stations, 2 single line stations, an external MOH source, and two serial ports.

The table below lists the components shipped with the VS-KSU.

Component	Quantity
VS-KSU	1
ADIX KT Programming Overlay	1
Wall Mounting Screws	4
User's card	1

☞ **Assembly**

1. Loosen the two screws on each side of the front panel.
2. Remove the front panel from the VS-KSU.
3. Insert the circuit card into each slot. Make sure to insert each card until the connectors snap into place.
4. Secure the FG bracet on the card with a screw.
5. Secure the card stopper bracket on the motherboard(VS-MAIN) with the four screws if no other cards are to be installed.

Completed Cabling

The completed cabling connections of an VS-KSU is illustrated in Figure 31.

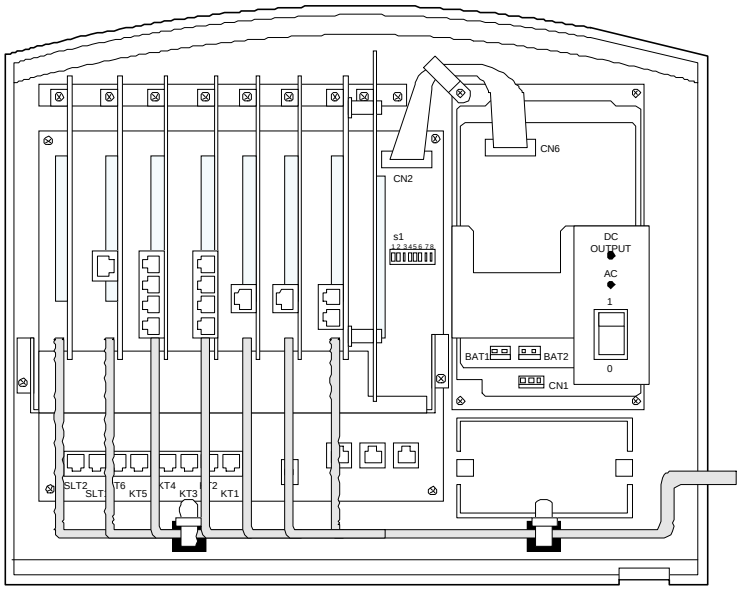

FIGURE 31. COMPLETED CABLING VS-KSU

Wall Mounting

The VS-KSU is designed to install on wall. Four wood screws are attached to mount the KSU.

☞ **To wall mount the ADIX-VS**

1. Drive two attached screws into wall (1).
2. Hang the KSU on the wall screws through two upper holes (2). Then tighten the screws to secure the KSU.
3. Drive two screws onto the wall through the lower two holes.

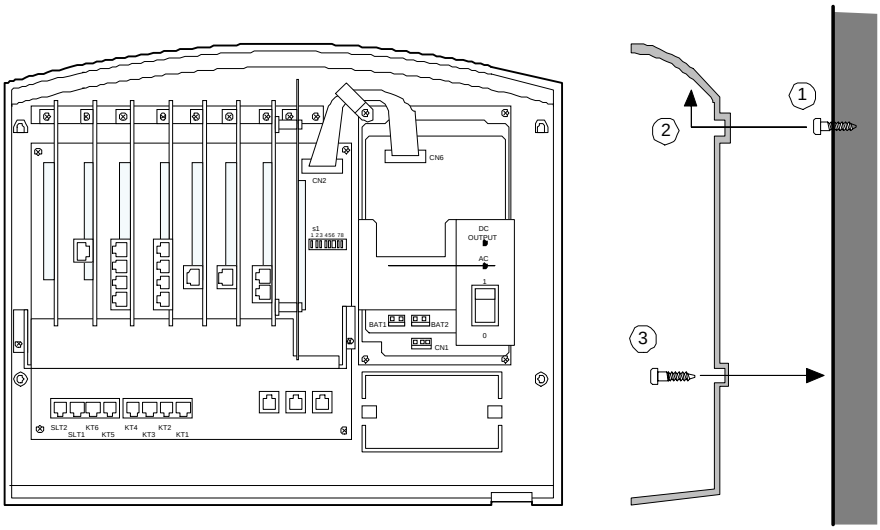

FIGURE 32. WALL MOUNTING

Emergency System Backup

Battery Backup If full system operation is required during a power failure, rechargeable gel cell backup batteries must be connected to the power supply. Backup batteries are charged while the system is powered up. In the event of a power failure, the batteries will prevent a system shutdown. The voltage of the batteries connected to the power supply must be between 19.0 VDC and 27.3 VDC.

Important! To reduce the risk of fire or injury, follow the instructions listed below:

- Use only a GS Battery model PE-12V0.8 or PE-12V7 sealed battery that was tested for UL safety. (Contact Authorized Distributor, Advanced Battery Systems, LLC, at 1-800-227-7090 and refer to Iwatsu ADIX-VS.)
- Do not dispose of the batteries by burning, the cell may explode. Check with local codes for special disposal instructions.
- Do not open or mutilate the batteries. Released electrolyte is a corrosive and may cause injury to the eyes or skin. It is toxic if swallowed.
- Handle the batteries with care to avoid shorting the battery by touching conducting materials such as rings, bracelets, screwdrivers and pliers.
- Charge the batteries in accordance with the instructions and limitations specified on page 32.
- Observe proper polarity orientation between the batteries and battery charger.
- Do not mix used and new batteries in this product.
- Do not mix batteries of different sizes or from different manufacturers in this product.

The table below lists the backup power consumption of the individual ADIX-VS components. Use it as a guide to determine the quantity of backup batteries needed.

Installing Internally Mounted Batteries

☞ **To install an internally-mounted backup battery in an ADIX-VS system:**

1. Remove the front panel.
2. Install the batteries PE-12V0.8 in the VS-KSU.
3. Connect the batteries to the connectors marked BAT1 and BAT2 on the VS-PWSU power supplies as illustrated in Figure 33 with cable provided. The cable is keyed and can only fit in one direction.

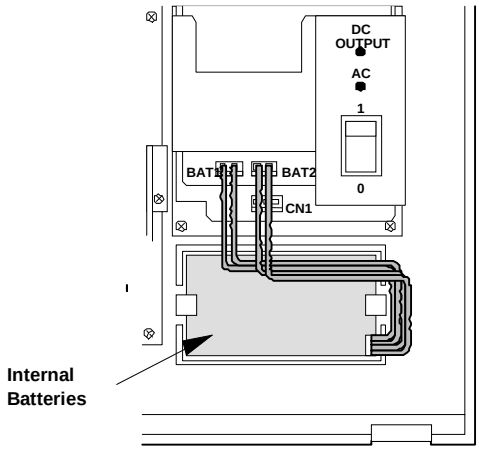

FIGURE 33. INTERNAL BACKUP BATTERY CONNECTION.

Caution! Danger of explosion if the battery is incorrectly replaced. Replace only with the same or equivalent type recommended by the manufacturer. Dispose used batteries according to the manufacturer's instruction.

Installing External Batteries

☞ **To install an external backup battery in an ADIX-VS system:**

1. Remove the front panel.
2. Feed the battery cable through the opening space on the lower left or right side of the VS-KSU.
3. Connect the batteries PE-12V7 to the connectors marked BAT1 and BAT2 on the VS-PWSU power supplies as illustrated in Figure 34. The red conductor is positive(+) and the black conductor is negative(-).

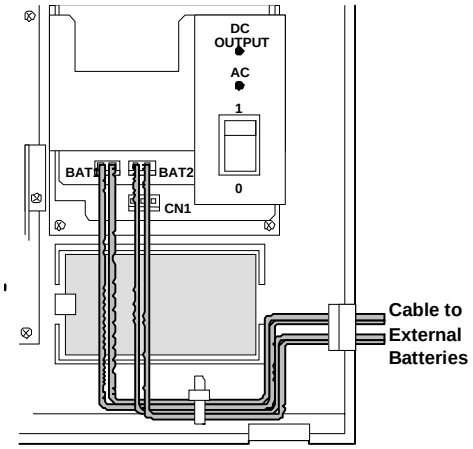

FIGURE 34. EXTERNAL BATTERY CONNECTION.

Caution! Danger of explosion if the battery is incorrectly replaced. Replace only with the same or equivalent type recommended by the manufacturer. Dispose used batteries according to the manufacturer's instruction.

Chapter 3 •

CPU Card Installation

The VS-CPU/MEM central processing unit card is always installed in the slot marked CPU/MEM located on the motherboard (VS-MAIN) card. A detailed description of the VS-CPU/MEM card is provided earlier in this manual.

Installation

☞ **Follow the procedures below to install the VS-CPU/MEM card:**

1. Make sure the NiCad battery is connected to the connector marked BATT.
2. Plug the VS-CPU/MEM card into the slot marked CPU on the motherboard (VS-MAIN) card. Make sure that the card is inserted deep enough for all connector pins to make complete contact with those on the motherboard(VS-MAIN).
3. Secure the FG bracket on the FG plate with a screw.
4. Secure the card stopper bracket on the motherboard(VS-MAIN) with the four screws if no other cards are to be installed.
5. Default the VS-CPU/MEM card.

☞ **To default the VS-CPU/MEM card:**

1. Make sure all cards and station terminals are properly connected and powered up.
2. Set position 1 of switch S1001 on the VS-CPU/MEM card to the OFF posistion.

   Note: Position 2, 3, and 4 must be OFF.
3. Press the red reset button labeled RESET(Sw1002).
4. When LED CLR on the VS-CPU/MEM card begins to flash, return position 1 of switch SW1001 on the VS-CPU/MEM card to the ON position.

Nickel-Cadmium Battery Recycling Procedure

The RBRC seal on the nickel-cadmium battery connected to the CPU card indicates that Iwatsu is voluntarily participating in an industry program to collect and recycle these batteries at the end of their useful lives when taken out of service in the United States. Instead of placing nickel-cadmium batteries into the trash or a municipal waste site, which is illegal in some areas, the RBRC program provides a convenient alternative for disposing used nickel-cadmium batteries.

Iwatsu's participation in the RBRC program allows you to recycle the spent battery by dropping it off at local retailers of replacement nickel-cadmium batteries or at the authorized Iwatsu distributor fom whom you purchased the product. For more information on recycling spent nickel-cadmium batteries contact your local recycling center or call 1-800-8-BATTERY. Iwatsu's involvement in this program is part of our commitment to protect the environment and conserve natural resources. The VS-CPU/MEM circuit card is shipped with a nickel-cadmium battery:

☞ **Nickel-Cadmium Battery Removal Instructions:**

1. The nickel-cadmium battery is connected to the connector marked BATT.
2. Disconnect the battery by squeezing and pulling off the connector.

Chapter 4 •

Trunk Installation

This section describes the installation process for terminating trunks to ADIX-VS trunk cards. Inspect all system components before beginning the installation process.

Trunk Interface Cards Overview

Trunk interface cards are used to connect both analog and digital trunks to the system. Analog trunk circuit can be programmed to accommodate either DP or DTMF lines.

CAUTION! Do not remove or insert a circuit card while the ADIX-VS is powered up. ADIX-VS does not support power-on maintenance.

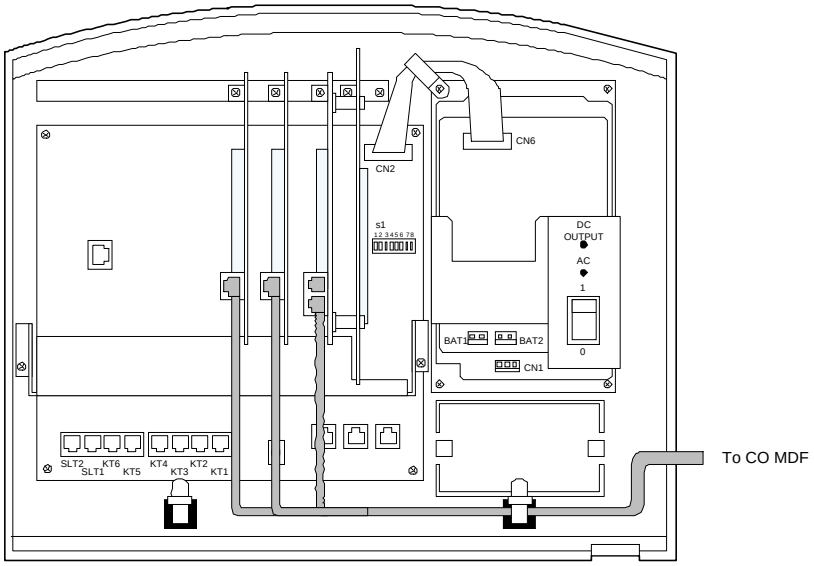

FIGURE 35. TRUNK CARD INSTALLATION

Installing Caller ID Loop Start Trunks (VS-2CITK)

Caller ID loop start trunks are terminated to the VS-2CITK card. Each VS-2CITK card interfaces two Caller ID loop start trunks to the ADIX-VS system. A maximum of three VS-2CITK cards may be installed in the system.

Preparation

1. Set line loss with switches SW101-SW201. These switches are numbered in order of the trunk circuits on the card. The factory default setting is 0dB.
2. Set the impedance of each circuit to 600 Ohms or 900 Ohms using switches SW102-SW202 .
3. Insure that fused are installed in locations F1-F4.

Installation

1. Loosen the two screws on each side of the card stopper bracket and slide the card stopper bracket down approximately ¼” in order to clear the circuit cards.
2. Plug the card into any trunk interface card slot. Make sure that the card is inserted deep enough for all connector pins to make complete contact with those on the motherboard (VM-MAIN).
3. Secure the FG bracet on the card with a screw.
4. Secure the card stopper bracket on the motherboard(VS-MAIN) with the four screws if no other cards are to be installed.

MDF Connections

CITK	Modular Jack Number	CM Wire Color	RJ11 Jack	
			Pin Number	Wire Color
1T	1, 3, 5	W-BL	3	GN
1R		BL-W	2	R
2T	2, 4, 6	W-GN	3	GN
2R		GN-W	2	R

VS-2CITK Port Assignment

Card Slot 1		
Circuit	**Physical Port**	**Logical Port Number**
1	065	Trunk Logical 010
2	066	Trunk Logical 011

Card Slot 2		
Circuit	**Physical Port**	**Logical Port Number**
1	067	Trunk Logical 012
2	068	Trunk Logical 013

Card Slot 3		
Circuit	**Physical Port**	**Logical Port Number**
1	069	Trunk Logical 014
2	070	Trunk Logical 015

Database Programming

Required Database Items: 01.03 Port Definition;01.04 Configuration;01.07 Number of System Trunk Ports;11.08 Dial Type(DP or DTMF);11.09 DTMF Dial Speed;11.11 Dial Pulse Speed;11.12 Dial Pulse Break Ratio;Class 24 Caller ID/ANI Conversion Data.

Installing ISDN BRI Trunk Trunks (VS-ICOTB)

ISDN BRI trunk trunks are terminated to the VS-ICOTB card. Each VS-ICOTB card interfaces one ISDN BRI trunk (2B+D) to the ADIX-VS system. A maximum of three VS-ICOTB cards may be installed in the system.

In order to support ISDN BRI trunks, the ADIX-VS system must meet the following hardware and software requirements:

- One VS-ICOTB card is required for one ISDN BRI (2B+D) subscriber trunk.
- One **Customer Provided** External NT1 device is required to interface one ISDN BRI trunk (2B+D) to the VS-ICOTB card.
- The table below lists the switch types and protocols supported by the VS-ICOTB card:

Switch Type	Protocol Type	Detail Type
DMS-100	National ISDN DMS-100(Custom)	Multipoint2
5EES	National ISDN	Multipoint2

- The ADIX-VS must be installed within the United States and Canada. ADIX-VS does not support European ISDN BRI.

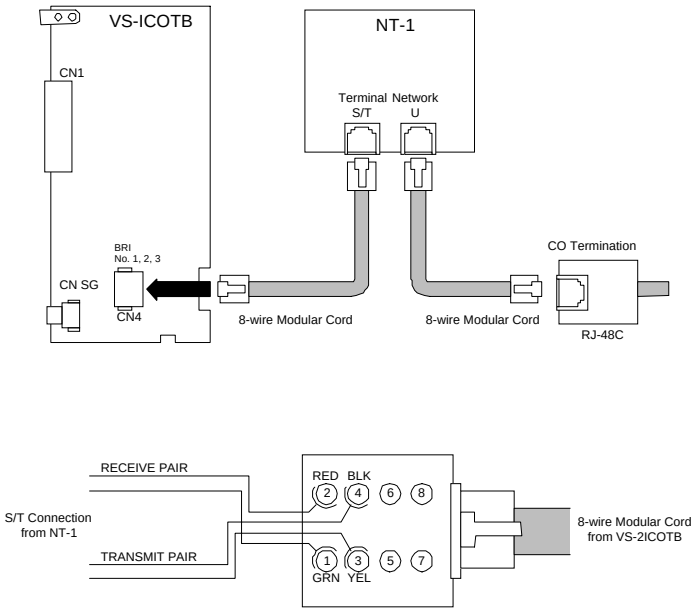

FIGURE 36. ISDN BRI TRUNK CONNECTION

Note: Figure 36 illustrates the typical connection of one ISDN BRI circuit. A separate NT-1 device is required for each ISDN BRI circuit terminated to the VS-ICOTB card. Use another VS-ICOTB card connector for connection of a second ISDN BRI circuit. A termination resistor is required.

Configuring ISDN BRI Trunks

Class 01.03 and Class 01.04 are used to indentify and configure ISDN trunks.

Physical Port Assignment. The table below illustrates physical port mapping of the VS-ICOTB ISDN BRI card.

Physical Port	Channel
1	B channel 1 of ISDN BRI subscriber trunk
2	B channel 2 of ISDN BRI subscriber trunk
3	Dummy station
4	D channel of ISDN BRI subscriber trunk

Programming the Protocol Type of the ISDN Carrier. Class 11.73 <TRKLxxx-02> is used to set the ISDN protocol type. Two settings are available, National ISDN or DMS-100. See Section 6 for detailed instructions on programming Class 11.73<TRKLxxx-02>.

Setting the SPID for BRI. The Service Profile Identifier(SPID) is an eight to twelve digit number that uniquely identifies the ISDN services ordered from thr telephone company.

This number is designated by the telephone company. For each ISDN BRI trunk, two SPID numbers are assigned, one for each B channel. Use Class 11.77 to enter the SPID numbers. See page Section 6 for detailed instructions on programming Class 11.77.

Routing ISDN Calls According to ANI or DNIS

The ADIX-VS may be programmed to route calls on ISDN BRI trunks according to either the ANI or DNIS digits received with the call.

Note: The ADIX-VS will not support an ANI or DNIS alphanumeric name ID sent by the telephone company over the ISDN BRI trunk. If this information is received with a call, it will not appear on the station LCD. The ADIX-VS displays only ANI/DNIS digits representing the telephone number.

To use this feature, the ADIX-VS must be enabled to route a call on the specific ISDN trunk according to the ANI or DNIS. Use Class 24.07-ANI Enabled ISDN Trunk when the ANI digits received with the call on a specific ISDN trunk are to be used for call routing.

Use Class 25.07-DNIS Enabled ISDN Trunk when the DNIS digits received with the call on a specific ISDN trunk are to be used for call routing. If both ANI and DNIS digits are received with the same call,Class 04.70,<NUM22> determines which data is used to route the call. If the ANI or DNIS conversion table does not contain routing information for the call, or if the trunk is not enabled for ANI in Class 24.07 or DNIS in Class 25.07, the ADIX-VS will route the call according to the following programming:

- Class 11.34-DIL to Hunt Group
- Class 11.32-Ringing Station
- Class 11.26-Attendant Intercept Trunk
- Class 04.55-True Attendant Position

Call Routing Using ANI. When an incoming call with ANI digits is received on an ISDN trunk, the system first looks to Class 24.07 to determine if the trunk is enabled for ANI call routing. If the ISDN trunk is enabled for ANI, the ADIX-VS will search Class24.01 for a match. If a match is found the system searches Class 24.03 for an alphanumeric ID and Class 24.02 for a ringing assignment. The ringing assignment can be either a station, master hunt group, ACD group or voice mailbox.

Call Routing Using DNIS. When an incoming call with DNIS digits is received on an ISDN trunk, the system first looks to Class 25.07 to determine if the trunk is enabled for DNIS call routing. If the ISDN trunk is enabled for DNIS, the ADIX-VS will search Class 25.01 for the DNIS digits received. If a match is found the system searches Class 25.03 for an alphanumeric ID and Class 25.02 for a ringing assignment. The ringing assignment can be either a station, master hunt group, or voice mailbox.

Conditions

1. One VS-ICOTB card supports one ISDN BRI trunk.
2. Incoming ISDN calls can be routed according to the ANI or DNIS digits received.
3. Class 24.07 must be enabled to allow call routing according to ANI or DNIS trunks. Class 25.07 must be enabled to allow call routing according to DNIS on ISDN trunks.
4. A SPID is required for each B channel on ISDN BRI trunk. These numbers, designated by the telephone company, are entered in Class 11.77<TRKLxxx-1> and 11.77<TRKLxxx-2>.

VS-ICTOB Port Assignment

Card Slot 1		
Circuit	**Physical Port**	**Logical Port Number**
1 (B)	049	Trunk Logical 001
2 (B)	050	Trunk Logical 002
3 (D)	052	Trunk Logical 003

Card Slot 2		
Circuit	**Physical Port**	**Logical Port Number**
1 (B)	053	Trunk Logical 004
2 (B)	054	Trunk Logical 005
3 (D)	056	Trunk Logical 006

Card Slot 3		
Circuit	**Physical Port**	**Logical Port Number**
1 (B)	057	Trunk Logical 007
2 (B)	058	Trunk Logical 008
3 (D)	060	Trunk Logical 009

Database Programming

01.03 Port Definition; 01.04 Port Configuration; 04.70 <NUM22>; 04.71 Call Coverage/Voice Mail Data;04.72 <NUM15>; 04.77 Voce Mail/Auto Attendant Packet Codes; 11.73 ISDN Switch Type; 11.74,<NUM2>=2 Controlling D Channel; 11.77,<NUM>2=1 SPID1 for BRI; 11.77, <NUM2>2=2 SPID2 for BRI; Class 24, Class 25.

Hardware Required:

ADIX-VS Hardware: VS-ICOTB

Customer Provided Equipment:NT1(External Hardware not provided by IWATSU).

Database Description

The following database items are required to program ISDN BRI subscriber trunks.

Class 01

Class.Item	Description	Function
01.03	Port Definition	For ISDN subscriber trunks
01.04	Port Configuration	Data settings for ISDN subscriber trunks

Class 04

Class.Item	Description	Function
04.70<NUM 22>	ANI/DNIS Routing Table Selection	Class 24 or 25 Routing table Selection

Class 11

Class.Item	Description	Function
01.08	Dial Type DP/DTMF	Programming Required for D channel signaling
11.73 e2=2	ISDN Protocol Type	Identiifies the Protocol Type of the ISDN Carrier.0=National ISDN, 1=DMS-100, 2=5ESS, 3=other
11.77 e2=1	SPID1 for BRI	Register the first SPID assigned for ISDN BRI trunk
11.77 e2=2	SPID2 for BRI	Register the second SPID assigned for ISDN BRI trunk

Class 24

Class.Item	Description	Function
24.07	ANI Enabled ISDN Trunk	Enables call routing via ANI digits received on ISDN subscriber trunk

Class 25

Class.Item	Description	Function
25.07	DNIS Enabled ISDN Trunk	Enables call routing via DNIS digits received on ISDN subscriber trunk

Chapter 5 •

Digital/SLT Station Installation

This section describes the installation process for ADIX-VS station interface cards. Inspect all system components before beginning the installation process.

System Hardware Requirements

The table below lists the hardware required for ADIX stations.

Station Type	Hardware Required
Digital stations	VS-4PSUB VS-MAIN
SLT stations	VS-MAIN

Installing the VS-MAIN (Motherboard)

The VS-MAIN card is the motherboard for the ADIX-VS. The VS-MAIN card provides six interface circuits for ADIX digital key telephones or Versa-Phones, and two interface circuits for on-premise single-line telephones. A detailed description of the VS-MAIN card is provided earlier in this bulletin.

Preparation

None.

Installation

None.

VS-MAIN Port Assignment

Circuit	Physical Port	Logical Port Number
1 (KT)	001	Station Logical 001
2 (KT)	002	Station Logical 002
3 (KT)	003	Station Logical 003
4 (KT)	004	Station Logical 004
5 (KT)	005	Station Logical 005
6 (KT)	006	Station Logical 006
23 (SLT)	023	Station Logical 007
24 (SLT)	024	Station Logical 008
PC	113	Miscellaneous Logical 001
PRN	114	Miscellaneous Logical 002

Database Programming

01.03 Port Definition; 01.04 Configuration;01.06 Number of System Station Ports;10.02 Station Number;Class 10

Installing the VS-4PSUB Card

The VS-4PSUB card provides four interface circuits for ADIX key telephones,Versa-Phones. See **Component Description** for detailed information on the VS-4PSUB card.

CAUTION! Do not remove or insert a circuit card while the ADIX-VS is powered up. The ADIX-VS does **not** support power-on maintenance.

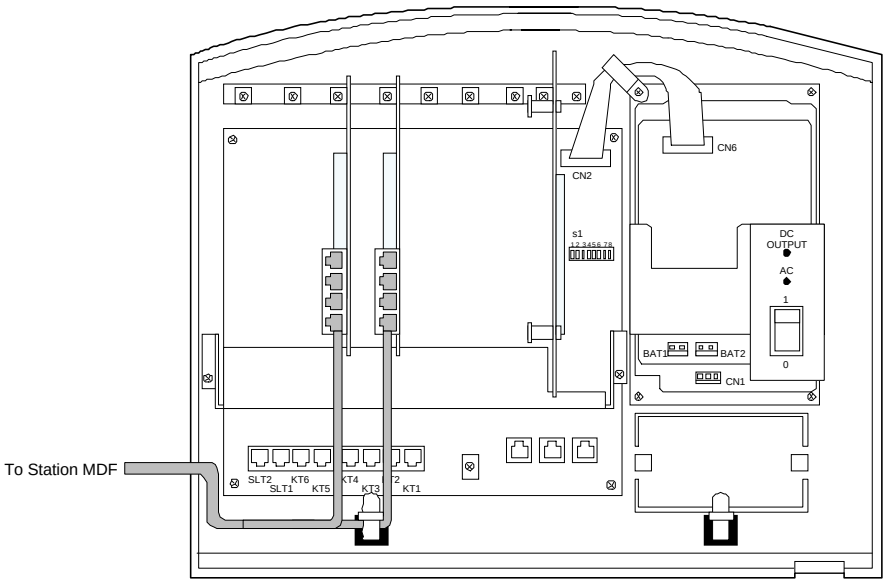

FIGURE37. STATION CARD INSTALLATION

Preparation

None.

Installation

1. Loosen the two screws on each side of the card stopper bracket and slide the card stopper bracket down approximately ¼” in order to clear the circuit cards.
2. Plug the card into any station card slot. Make sure that the card is inserted deep enough for all connector pins to make complete contact with those on the motherboard (VM-MAIN).
3. Secure the FG bracet on the FG plate with a screw.
4. Secure the card stopper bracket on the motherboard(VS-MAIN) with the four screws if no other cards are to be installed.

Pin-out of KT Connections

Modular		RJ11 Jack		MDF	CM
Jack Number	4PSUB	Pin Number	Pin Number	Wire Color	Wire Color
KT 9/13	1PT	3	1	W-BL	GN
	1PR	2	2	BL-W	R
	FG	4	3	W-O	Y
	FG	1	4	O-W	BK
KT 10/14	2PT	3	5	W-GN	GN
	2PR	2	6	GN-W	R
	FG	4	7	W-BR	Y
	FG	1	8	BR-W	BK
KT 11/15	3PT	3	9	W-SL	GN
	3PR	2	10	SL-W	R
	FG	4	11	R-BL	Y
	FG	1	12	BL-R	BK
KT 12/16	4PT	3	13	R-O	GN
	4PR	2	14	O-R	R
	FG	4	15	R-GN	Y
	FG	1	16	GN-R	BK

VS-4PSUB Port Assignment

Card Slot 4		
Circuit	**Physical Port**	**Logical Port Number**
1	009	Station Logical 009
2	010	Station Logical 010
3	011	Station Logical 011
4	012	Station Logical 012

Card Slot 5		
Circuit	**Physical Port**	**Logical Port Number**
1	013	Station Logical 013
2	014	Station Logical 014
3	015	Station Logical 015
4	016	Station Logical 016

Database Programming

01.03 Port Definition;01.04 Configuration;01.06 Number of System Station Ports;10.02 Station Number;Class 10

Single-Line Telephone Installation

The VS-MAIN Motherboard supports two single-line telephones. The following conditions apply to single-line telephones installed in the ADIX-VS system.

SLT Ringing

In order to distinguish ringing when two SLTs are connected, the ringing start time of the second SLT is delayed two seconds.

SLT Ringing Cycle. 1 second On, 3 seconds OFF

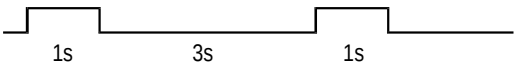

Note: Single-Line Telephones that utilize an electro-magnetic bell may not ring properly because of the characteristics of the ringing signal for SLTs provided by the ADIX-VS. The ADIX-VS supplies square wave DC voltage as its ring generator

Message Lamps

The ADIX-VS does not support message lamps installed on Single-Line Telephones.

Chapter 6 •

Optional Feature Installation

System Hardware Requirements

This chapter provides installation instructions for optional system features. Optional features include customer-provided devices connected through shared resource interface cards installed in the ADIX-VS.

The table below lists the hardware required for optional features.

Feature	Hardware Required
Background Music	VS-MISC
Paging/Zone Page	VS-MISC
Remote Control	VS-MISC
Night Switch Sensor	VS-MISC
Music-On-Hold	VS-MAIN
SMDR printer	VS-MAIN
PC Programming	VS-MAIN
Remote Programming	VS-MAIN

Installing the VS-MISC Card

Most customer provide devices for optional features are terminated to the VS-MISC card. This section describes installation procedures. Detailed information regarding the VS-MISC card are provided earlier in this bulletin.

CAUTION! Do not remove or insert any circuit card while the ADIX-VS is running. The ADIX-VS does **not** support power-on maintenance.

The VS-MISC card uses system ports for the following input/output functions:

- External BGM Source Connection
- Paging Zones
- Remote Control Relays
- Sensor Inputs

VS-MISC Card Port Assignment and Function

The table below lists the default function of each circuit on the VS-MISC card:

Card Slot 7			
Circuit	**Physical Port**	**Logical Port Number**	**Function**
1	105	Miscellaneous Logical 003	Page Zone1
2	106	Miscellaneous Logical 004	BGM Source
3	107	Miscellaneous Logical 005	Not used
4	108	Miscellaneous Logical 006	Relay Control
5	109	Miscellaneous Logical 007	Sensor Input
6	110	Miscellaneous Logical 008	Page zone 2
7	111	Miscellaneous Logical 009	Not used
8	112	Miscellaneous Logical 010	Not used

Preparation

1. Set the option switchs on the VS-MISC card according to the desired function.
2. Set SW2A,SW2B,and SW2C to either 4-wire or 2-wire depending on type of paging amplifier used.
3. Set BGSW to USED if BGM through paging amplifiers is desired. If not, set to UNUSED
4. Set SWBG1-SWBG2 to output BGM through page zones 1-2 as desired.
5. Using a screwdriver, adjust VR1 to set the BGM output volumes.

Installation

1. Plug the card into any universal card slot. Make sure that the card is inserted deep enough for all connector pins to make complete contact with those on the motherboard (VS-MAIN).
2. Secure the FG bracket on the FG plate with a screw.
3. Secure the card stopper bracket on the motherboard(VS-MAIN) with the four screws if no other cards are to be installed.

MDF Connections

One quick-connection type connector is provided with the VS-MISC card. Using the table below as a guide,insert the thirty-two conectors of the cable into holes 1 through 32 makeing sure to match the correct wire color.

VS-MISC CN2	Wire Color	Signal Name	Description
1	W-BL	PAG OUT(+)	Audio output to P.A.Amplifier [4wire](+)
2	BL-W	PAG OUT(-)	Audio output to P.A.Amplifier [4wire](-)
3	W-O	TA IN (+)	Audio input to P.A.Amplifier [2wire](+)(Two-way
4	O-W	TA IN (-)	Audio input to P.A.Amplifier [2wire](-) page only)
5	W-GN	BGM IN (+)	Audio input of BGM Source
6	GN-W	BGM IN (-)	Audio input of BGM Source
7	W-BR	BGM OUT(+)	Output BGM through P.A.Amplifier(+)
8	BR-W	BGM OUT(-)	Output BGM through P.A.Amplifier(-)
9	W-SL	-	
10	SL-W	-	
11	R-BL	-	
12	BL-R	-	
13	R-O	ZPA(+)	Zone Page Speaker Input(+)
14	O-R	ZPA(-)	Zone Page Speaker Input(-)
15	R-GN	ZBGM(+)	Zone Page BGM Input(+)
16	GN-R	ZBGM(-)	Zone Page BGM Input(-)
17	R-BR	ZONE1(+)	Page Speaker Zone 1 Speaker Output(+)
18	BR-R	ZONE1(-)	Page Speaker Zone 1 Speaker Output(-)
19	R-SL	ZONE2(+)	Page Speaker Zone 2 Speaker Output(+)
20	SL-R	ZONE2(-)	Page Speaker Zone 2 Speaker Output(-)
21	BK-BL	PAST(+)	P.A.Amplifier Control Contact(+)
22	BL-BK	PAST(-)	P.A.Amplifier Control Contact(-)
23	BK-O	-	
24	O-BK	-	
25	BK-GN	RL1(+)	Flex Contact No.1(+)
26	GN-BK	RL1(-)	Flex Contact No.1(-)
27	BK-BR	RL2(+)	Flex Contact No.2(+)
28	BR-BK	RL2(-)	Flex Contact No.2(-)
29	BK-SL	SENS1(+)	Sensor Input No.1(+)
30	SL-BK	SENS1(-)	Sensor Input No.1(-)
31	Y-BL	SENS2(+)	Sensor Input No.2(-)
32	BL-Y	SENS2(-)	Sensor Input No.2(+)

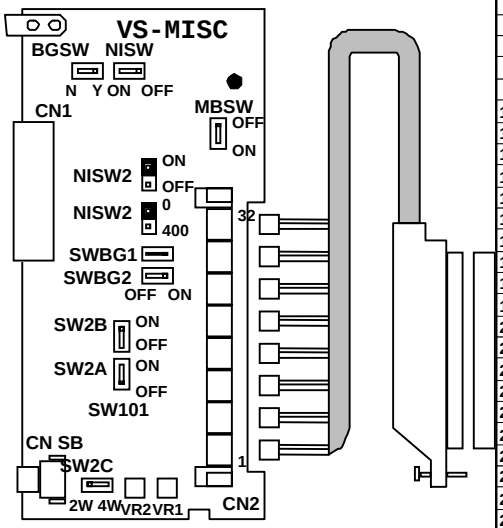

Punchdown

1	Page Out +
2	Page Out -
3	Page In
4	Page In (-
5	BGM In
6	BGM In (-
7	BGM Out
8	BGM Out (-
9	-
10	-
11	-
12	-
13	ZP Spkr In
14	ZP Spkr In (-
15	ZP BGM In
16	ZP BGM In (-
17	ZP Spkr Out 1
18	ZP Spkr Out 1
19	ZP Spkr Out 2
20	ZP Spkr Out 2
21	PA Amp Cntrl
22	PA Amp Cntrl
23	-
24	-
25	Flex Relay 1
26	Flex Relay 1 (-
27	Flex Relay 2
28	Flex Relay 2 (-
29	Sensor In 1
30	Sensor In 1
31	Sensor In 2
32	Sensor In 2

FIGURE 38. VS-MISC PUNCHDOWN TABLE.

Relay Contacts

Most applications require a slave relay if the application circuit power exceeds the control circuit contact ratings. Install a slave relay with a protective diode IN4002 (or equivalent) across the coil,and an external power source conforming to the slave relay operating parameters.

Figure 39 illustrates a standard relay connection with circuit protection and power source. Do not exceed the following internal relay contact specifications when these terminals are used:

- Control Relay Contact Ratings: 24VDC, 1Amp
- Input Impedance: 600 Ohms

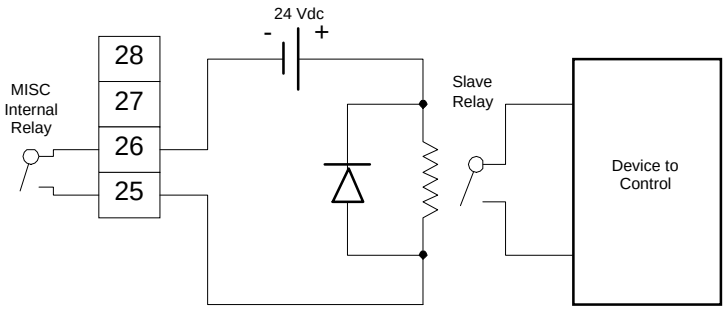

FIGURE 39. SLAVE RELAY ON DISTRIBUTION PANEL

Installing the VS-VML Card

The VS-VML card provides 4 voice mail/auto attendant ports. This card is installed in slot 6 of the VS-MAIN motherboard. Follow the instructions below to install the VS-VML.

Step 1a: Installing the VS-VML Card in an existing system

Step 1a is only required if the VS-VML card is being installed in an existing ADIX-VS system.

Note: DO NOT INSTALL THE VS-VML CARD UNTIL STEP 9.

1. From an ADIX Attendant key telephone (SATT) or ADIX KT+DSS, enter ADIX database programming mode.
2. Go to Class 01 Item 06 — "Number of System Station Ports" and increase the number of system station ports by eight ports for each VS-VML card.
3. Exit ADIX database programming mode and wait until the memory LED on the CPU stops flashing to indicate completion of the data write process (approximately 10 seconds depending on the size of your database).
4. Reset the ADIX by pressing the Reset button on the CPU card.
5. After the system reset is complete, enter ADIX database programming mode. Go to Class 01 Item 03 — "Port Definition" and program all eight of the physical ports corresponding to the card slot in which the IX-4VML will be installed as voice mail/auto attendant ports (data = 0-4-1-*logical port number*).

   Note: All eight ports must be programmed as voice mail ports for both IX-4VML (4 ports) and IX-4VML with IX-4EVML (8 ports) installations.
6. Go to Class 01 Item 04 — "Port Configuration" and program the physical ports corresponding to the card slot in which the VS-VML is installed (defined as voice mail ports in step 5) as 0 - Voice Mail Auto Attendant Port (default).
7. Exit ADIX database programming mode and wait 10 seconds.
8. Power down the ADIX
9. Insert the VS-VML card in the card slot.

   Important: This card slot must correspond to the physical port numbers that were programmed as voice mail ports in steps 5 and 6 above.
10. Go to Step 2 of the installation process.

11. Step 2: ADIX Database Programming

1. Step 2 is required for all VS-VML card installations.
2. Enter ADIX database programming mode. Go to Class 04 Item.77 and program each DTMF packet. (Suggested Class 04.77 settings are listed in the table on the next page.)
3. Program Class 04.71 <NUM14> to equal **2.** This programs the ADIX to send the calling extension and Caller ID/ANI (if used) to Omega-Voice VMI (Software Version 4.71/5.71, ACD 2.31 and higher only). If trunk information is also required, set this item to equal **5**.
4. Required. Go to Class 04 Item 71 <NUM13> and program the disconnect signal type for voice mail ports to equal **1** (disconnect by loop open).
5. Go to Class 04 Item 71 <NUM15> and program the loop open duration for voice mail ports to equal 7 (700 milliseconds).
6. Class 07 Item 02 — "Hunting Group Access Number" and assign an access code for hunt group 47.
7. Class 07 Item 06 — "Feature Access Number" and assign an access code for the following:
   - <NUM01> - Cancel Code (e.g., 501)
   - <NUM19> - Activate Message Lamp (e.g., 519)
   - <NUM48> - Voice Mail Access Number for Transfer or Direct Mailbox Access (e.g., *)
7. Go to Class 08 Item 02 — "Hunt Group Station" and assign all station logical ports defined as voice mail ports to Hunt Group 47.
8. **Recommended Programming:** Setup the Attendant All Call feature in Class 04 Item 55 and Class 07 Item 06 <NUM30>.

Programming Background Music

The ADIX-VS System provides a background music(BGM) interface to external P.A.system speakers and KT station speakers.

Play BGM Through All KTs

☞ **Programming and Conection:**

1. Access the programming mode from a programming KT,or PC Programmer Software. Go to *Clase 04 Item 03-BGM Input Port.*
2. Connect the BGM source output to the punchdown block as illustrated in Figure 40.
3. Turn potentiometer VR1 on the VS-MISC to adjust the BGM volume. Clockwise to increase, counterclockwise to decrease.
4. Connect the output from the punchdown block to one quick-connection type connector on the VS-MISC card.
5. Press [FEAT]+[6][2] from a KT to turn on BGM. Press [FEAT]+[0][6][2] to turn off BGM.

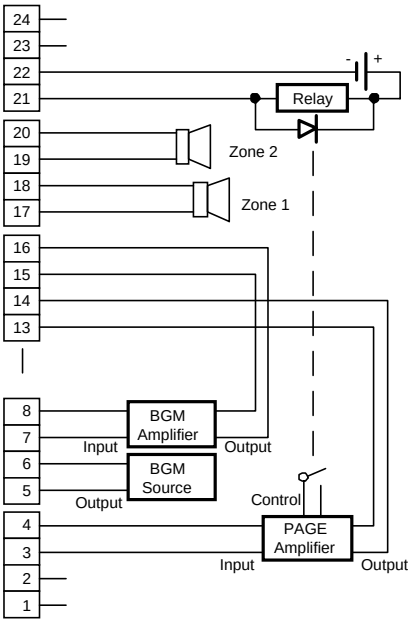

FIGURE 40. BGM WIRING

Play BGM Through All Speakers and External Paging

External BGM can be played through all paging speakers(non-zone) when the speaker is idle, or through individual zones when the zone is idle.

☞ **Setup and Programming:**

1. Access the programming mode from a programming KT,or PC Programmer. Go to *Class 04 Item 03-BGM Input Port.* Set the BGM input port to be equal to the second miscellaneous port on the VS-MISC card-002.
2. Go to *Class 04 Item 04-BGM output Port.* Enter either the miscellaneous logical port of the BGM source(second circuit on the VS-MISC),or the miscellaneous logical port number of Page Zone 1(first circuit on the VS-MISC). Either of these data entries will cause BGM output through the page circuit(pin 3 and 4, TA IN, on the punchdown block).
3. Connect the BGM source output and page amplifier to the punchdown block as illustrated in Figure 41.
4. Turn potentiometer VR1 on the VS-MISC to adjust the BGM volume. Clockwise to increase, counterclockwise to decrease.
5. Connect the output from the punchdown block to one quick-connection type connector on the VS-MISC card.
6. Reset the system to effect the programming changes.

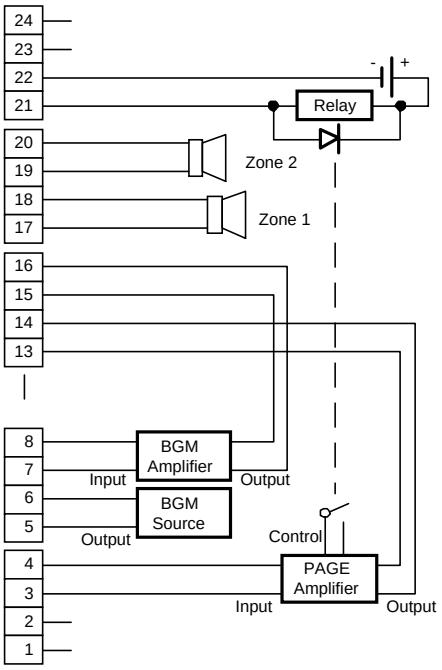

FIGURE 41. BGM THROUGH ALL SPEAKER WIRING

Play BGM Through Individual Paging Zones

Follow the steps below to route BGM, using the VS-MISC interface, to up to two external zone outputs. You can enable or disable BGM for each zone by setting strapping jacks for ZONE1 through ZONE2 on the VS-MISC card.

☞ Setup and Programming

1. Access the programming mode from a programming KT,or PC Programmer. Go to *Class 04 Item 03-BGM Input Port.* Set the BGM input to be equal to the second miscellaneous port on the VS-MISC card-002 and press[ENTER].
2. Go to *Class 04 Item 04-BGM output Port.* Enter either the miscellaneous logical port number of the BGM source(second circuit on the VS-MISC),or the miscellaneous logical port number of Page Zone 1(first circuit on the VS-MISC). Either of these data entries will cause BGM output through the page circuit(pin 3 and 4, TA IN, on the punchdown block).
3. Make sure the BGM AMP strapping jack on the VS-MISC card is in the RIGHT position. This will cause BGM to output pins 7 and 8 BGM OUT on the punchdown block.
4. Connect the BGM extarnal amplifier input to pins 7 and 8 BGM OUT on the punchdown block as illustrated in Figure 42.
5. Connect the speaker output of the external amplifier to pins 17 and 18 ZONE BGM IN on the punchdown block as illstrated in Figure 42. Connect the output from the punchdown block to one quick-connection type connector on the VS-MISC card.
6. Reset the system to effect the programming changes.

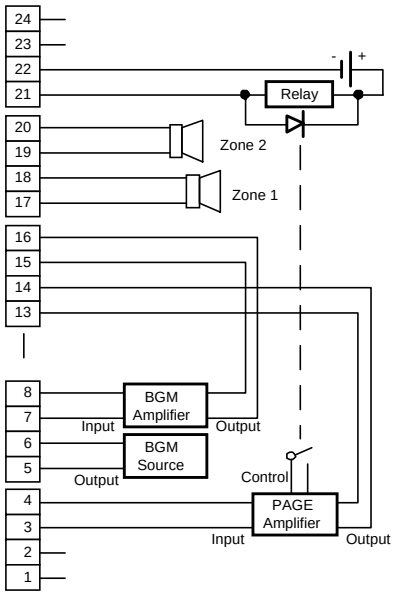

FIGURE 42. BGM THROUGH INDIVIDUAL PAGING ZONES

Programming the System for External Paging

This section describes the various external paging applications compatible with the ADIX-VS System. The VS-MISC provides 2 external page zones.

Paging Through a P.A. System

The VS-MISC card and a punchdown block must be installed to interface a P.A. system to ADIX-VS System.

☞ **Setup and Programming**

1. Access the programming mode from a programming KT,or PC Programmer. Go to *Class 08 Item 04-Page Group Station/Zone*.
2. Create the desired paging groups. Press [ENTER] to save.
3. Go to *Class 07 Item 04-Page Group Access Number*.
4. Program a page group access number for each page group. Press [ENTER] to save.
5. Set the PAGE AMP strapping jack on the VS-MISC card to either the 0N(2-WIRES) or OFF(4-WIRES) position.

Note: When the VS-MISC card is set to 2-WIRES, the TA IN pins on the punchdown block become a two-way path. When the VS-MISC card is set to 4-WIRES, paging voice is sent out throuh thePAGE OUT pins on the punchdown block while take-back voice is received through the TA IN pins.

6. Do one of the following:
   - If the PAGE AMP strapping jack on the VS-MISC card is set to 2-WIRES, connect the audio input/output terminal of the paging amplifier to pins 3 and 4,TA IN, located on the punchdown block.
   - If the PAGE AMP strapping jack on the VS-MISC card is set to 4-WIRES, connect the output terminal to pins 1 and 2,PAGE OUT and the input terminal to pins 3 and 4, TA IN located on the punchdown block.
7. Connect the page amplifier power control relay (SLAVE) to the PAGE CONTROL(+) and (-) pins on the punchdown block as illustrated in Figure 43.

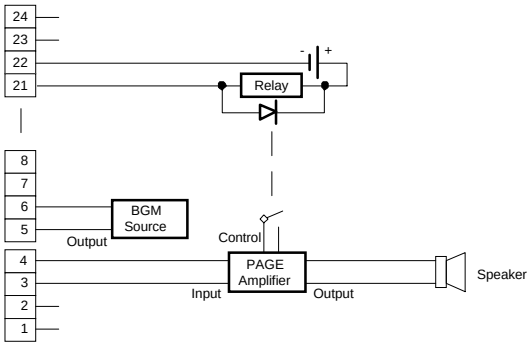

FIGURE 43. PAGING THROUGH A P.A.AMPLIFIER

Zone Paging

The VS-MISC card and a punchdown block must be installed to interface to a zone P.A. system.

☞ **Setup and Programming:**

1. Access the programming mode from a programming KT,or PC Programmer. Go to *Class 08 Item 04-Page Group Station/Zone*.
2. Create the desired paging groups. Press [ENTER] to save.
3. Go to *Class 07 Item 04-Page Group Access Number*.
4. Program apage group access number for each page group. Press [ENTER] to save.
5. Set the PAGE AMP strapping jack on the VS-MISC card to either the 0N(2-WIRES) or OFF(4-WIRES) position.

Note: When the VS-MISC card is set to 2-WIRES, the TA IN pins on the punchdown block become a two-way path. When the VS-MISC card is set to 4-WIRES, paging voice is sent out throuh thePAGE OUT pins on the punchdown block while take-back voice is received through the TA IN pins.

6. Do one of the following:
   - If the PAGE AMP strapping jack on the VS-MISC card is set to 2-WIRES, connect the audio input/output terminal of the paging amplifier to pins 3 and 4,TA IN, located on the punchdown block.
   - If the PAGE AMP strapping jack on the VS-MISC card is set to 4-WIRES, connect the output terminal to pins 1 and 2,PAGE OUT and the output terminal to pins 3 and 4,TA IN located on the punchdown block.
7. Connect the page amplifier power control relay (SLAVE) to the PAGE CONTROL(+) and (-) pins on the punchdown block as illustrated in Figure 44. (Not required in all instalations.)
8. Connect the page amplifier output for P.A. zone speakers to ZPA (+) and (-) pins on the punchdown block as illustrated in Figure 44.

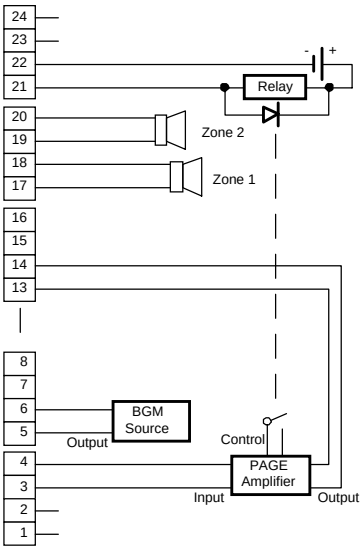

FIGURE 44. ZONE PAGING WIRING

☞ **To connect the zone speakers:**

1. Connect the P.A. zone speakers(1 through 2) to the ZONE1 through ZONE2 pins on the punchdown block.
2. Figure 43 illustrates the relay connections for P.A. system including the page amplifier, BGM amplifier,and zone speakers.

Two-Way Paging

The ADIX-VS System can be connected to two-way talk-back paging amplifiers.Either a two-wire or four-wire talk-back amplifier can be used. The two-wire connection reduces the P.A. input sensitivity because of the hybrid circuit inserted in the input.

☞ **Setup and Programming:**

1. Set the PAGE AMP strapping jack on the VS-MISC card to either the ON(2-WIRES) or OFF(4-WIRES) position.

Note: When the VS-MISC card is set to 2-WIRES, the TA IN pins on the punchdown block become a two-way path. When the VS-MISC card is set to 4-WIRES, paging voice is sent out throuh the PAGE OUT pins on the punchdown block while take-back voice is received through the TA IN pins.

2. Do one of the following:
   - If the PAGE AMP strapping jack on the VS-MISC card is set to 2-WIRES, connect the audio input/output terminal of the paging amplifier to pins 3 and 4,TA IN, located on the punchdown block.
   - If the PAGE AMP strapping jack on the VS-MISC card is set to 4-WIRES, connect the output terminal to pins 1 and 2, PAGE OUT and the input terminal to pins 3 and 4,TA IN located on the punchdown block.
3. Connect the page amplifier power control relay (SLAVE) to the PAGE CONTROL(+) and (-) pins on the punchdown block as illustrated in Figure 45.(Not required in all instalations.)

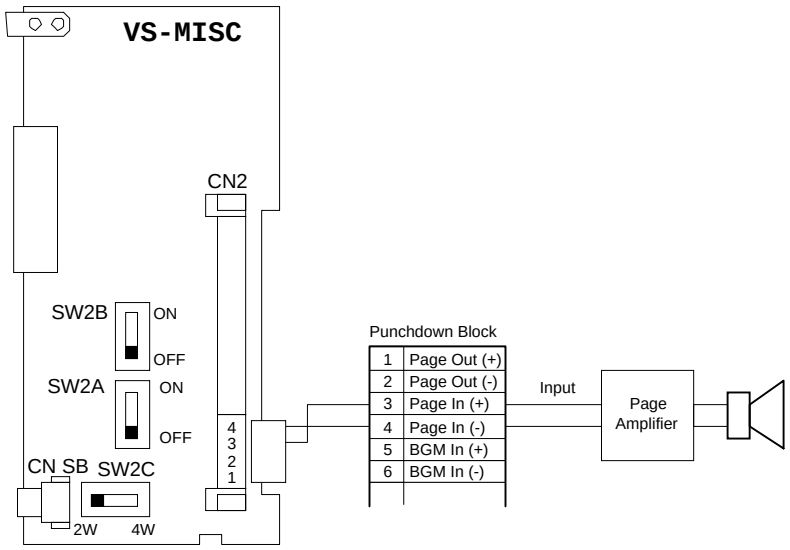

FIGURE 27. TWO-WAY PAGING WIRING

External Ringer

Individual incoming trunks can be assigned to activate an external loud ringer connected to the punchdown block. The ringer can be set as either a day ringer or a night ringer

☞ **To set up an external ringer:**

1. Access the programming mode from a programming KT,or PC Programmer. Go to *Class 04 Item 35-MISC Function Port* and program the miscellaneous logical port location of the relays and the relay numbers on the VS-MISC card to be used for external ringing.
2. Go to *Class 04 Item 37-MISC function* and program the type of relays you are using.
3. Go to *Class 11 Item 35-Loud Ringer Relay Number* and program the relay to activate when there is an incoming call on the desired trunks.
4. Go to *Class 11 Item 28-UNA Relay Number* and program the desired relay to activate when there is an incoming call on a UNA trunk. UNA Trunks are programmed in Class 11.27.
5. Connect the ringer and ringing generator through slave relays to L1 through L2 on the punchdown block (corresponding to relay numbers 1 to 8 assigned above)as illustrated in Figure 46.

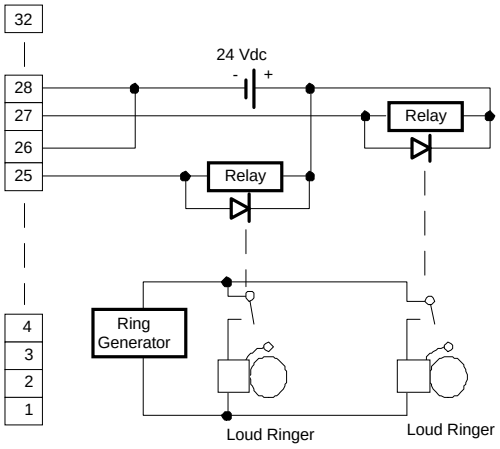

FIGURE 48. EXTERNAL RINGER WIRING

Remote Control

Flexible relays on the VS-MISC card can be used to control a customer provided device such as an electric door lock.

☞ **Setup and Programming:**

1. Access the programming mode from a programming KT,or PC Programmer. Go to *Class 04 Item 35-MISC Function Port* and program the miscellaneous logical port location of the relays and the relay numbers on the VS-MISC card to used for remote control applications.
2. Go to *Class 04 Item 36-MISC Relay Timer* and program the length of time the relays will operate for.
3. Go to *Class 04 Item 37-MISC Function* and program the type of relays you ar using.
4. Go to *Class 14 Item 01-Flexible Key Assignment* and/or *Class 15 Item 01-Attendant Key Assignment* and program a [REMOTE] key to operate the remote control application.
5. Connect the device to be controlled through slave relays to L1 through L2 on the punchdown block (corresponding to relay numbers 1 to 8 assigned above)as illustrated in Figure 47.

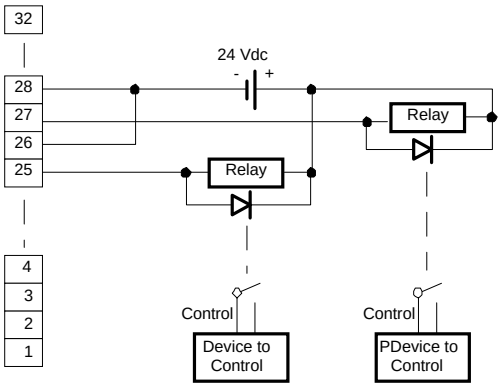

FIGURE 47. REMOTE CONTROL WIRING

Night Mode Switch

A universal night switch can be installed to manually switch the system into night mode.

☞ **Setup and Programming:**

1. Access the programming mode from a programming KT,or PC Programmer. Go to *Class 04 Item 31-Night Mode Start Time* and program automatic night mode start time if desired. The default setting is 0-No automatic Switching.
2. Go to *Class 04 Item 35-MISC Function Port* and program the miscellaneous logical port location of the sensor on the VS-MISC card and the sensor number which will be used as a night mode switch.
3. Go to *Class 04 Item 37-MISC Function* and program the sensor type.
4. Connect a push-on/push-off or toggle type switch to SENS1 throuh SENS2 on the punchdown block corresponding to the sensor number assigned in programming as illustrated in Figure 48.

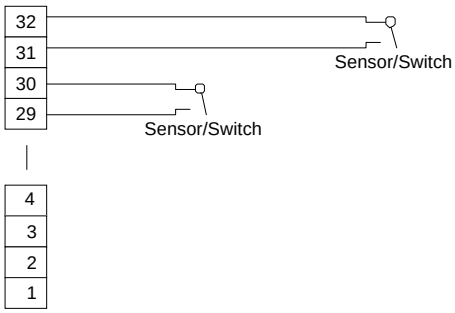

FIGURE 48. NIGHT MODE SWITCH

Programming Music On Hold (MOH)

The ADIX-VS System can be programmed to play music on hold using an external MOH source.

☞ **Installation and Programming**

1. Access the programming mode from a programming KT,or PC Programmer.
2. Set the data filed to 1- External Music on Hold Source and Press[ENTER]
3. Connect the output from the MOH source to the green and yellow wires of a modular jack.
4. Connect the output from the MOH source control relay to the red and black wires of a modular jack.
5. Plug the output from the modular jack into the MOH modular jack on the VS-MAIN (motherboard) card using an industry standard base cord as illustrated in Figure 49.

Note: The MOH control relay is normally open. The contacts close when a trunk is placed on hold.

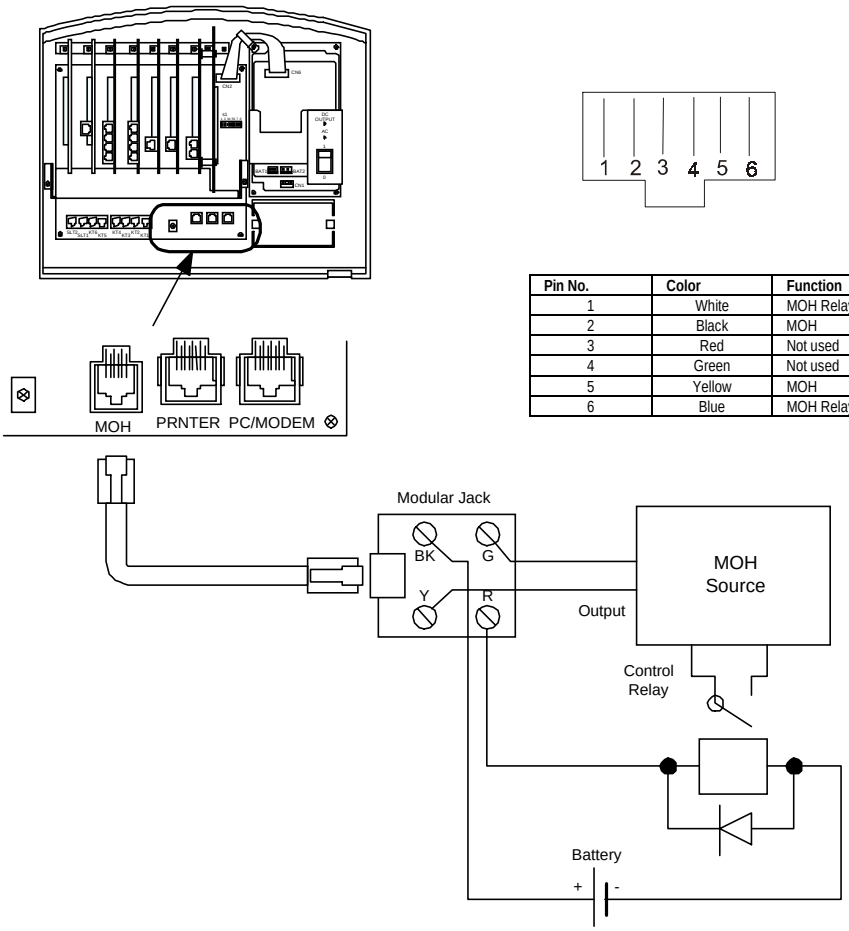

Pin No.	Color	Function
1	White	MOH Relay Control
2	Black	MOH
3	Red	Not used
4	Green	Not used
5	Yellow	MOH
6	Blue	MOH Relay Control

FIGURE 49. WIRING FOR AN EXTERNAL MOH SOURCE

Station Message Detail Recorder

A printer connected to the RS232C port (PRINTER) on the motherboard(VS-MAIN) card can print out details of incoming and outgoing calls made through the ADIX-VS System.

☞ **To install a station message detail recorder:**

1. Plug the attached serial cable into the connector labeld PRINTER on the motherboard (VS-MAIN) card as illustrated Figure 50.
2. Plug the other side of the cable into a serial printer. Use an extension cable or DB9 to DB25 conversion connector if neccessary.
3. Progarm the SMDR port using *Class 01.03-Port Definition.* Program *Class 04 Items 50, 51, 52, 53 and 54* as required. Refer to Section 6- Database Programming Guide for more information on SMDR.

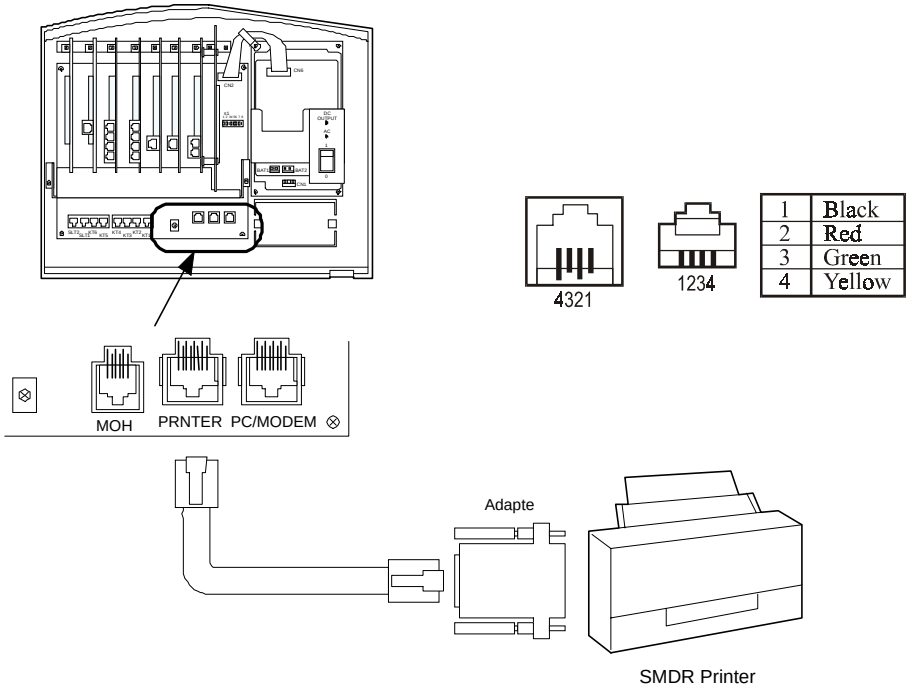

FIGURE 50. STATION MESSAGE DETAIL RECORDER(SMDR)CONNECTION)

On-Site PC Programmer

An IBM compatible XT/AT personal computer can be used to program or change the ADIX-VS database. The motherboard (VS-MAIN) card is required for serial communication.

☞ **Setup and Programming:**

1. Plug the serial cable into the connector labeld PC/MODEM on the motherboard(VS-MAIN) card as illustrated Figure 51.
2. Plug the other side of the cable into a COM1 or COM2 serial port on the PC. Use an extension cable or DB9 to DB25 conversion connector if neccessary.
3. Program the RS232C port using *Class 01.03-Port Definition.*

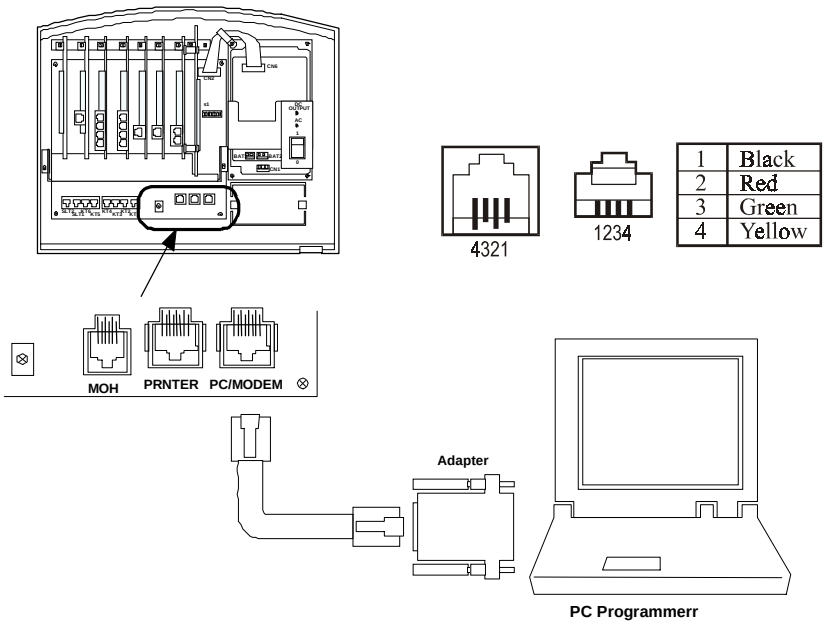

FIGURE 51. ON-SITE PC PROGRAMMING CONNECTION

Using ADIX PC Programmer

Follow the directions below to use the ADIX PC Programmer interface to program the ADIX-VS Telephone System.

Note: ADIX PC Programmer saves the database as a series of files with extentions. The file extensions for ADIX-VS databases are .KVA – .KVZ . This does not include file extension .KVY.

☞ **Accessing ADIX PC Programmer:**

1. Download the database from the ADIX-VS to the PC.
2. From the Mainu menu, select Program Database.
3. From the Programming menu, select System Data Edit.
4. From the System menu, select ADIX-VS.
5. In the Database Edit window, input the file of the database.
6. Select the Edit Method.
7. You may now access the programming Classes and Items used by the ADIX-VS.

Section 4 •

ADIX-VS Programming

ADIX-VS Physical Port Layout

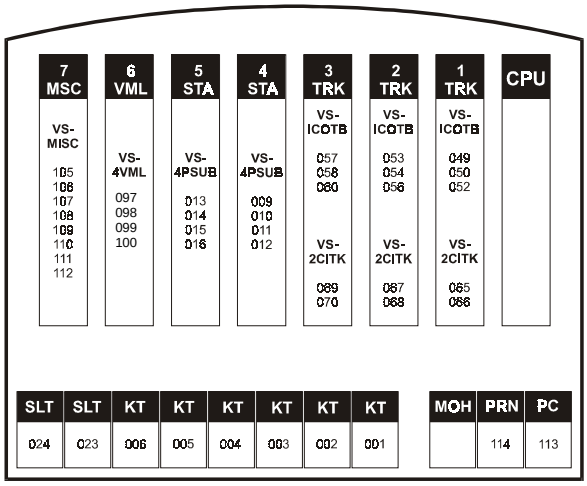

ADIX-VS Logical Port Layout

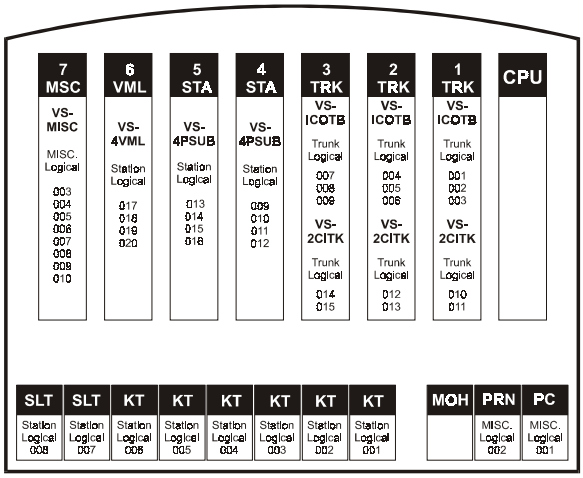

System Port Layout

The ADIX-VS system has dedicated card slots and station and miscellaneous ports. Each circuit corresponds to a fixed physical port and a fixed logical port. These fixed physical and logical port numbers are used for system programming.

The ADIX-VS system architecture has 001-114 ports pre-programmed to correspond with the ADIX architecture. Only 45 logical ports are available in the ADIX-VS system due to physical port numbers that are skipped.

Physical Port Layout

The *physical port number* is a fixed location number corresponding to a single circuit on either the VS-MAIN motherboard, or a station, trunk, miscellaneous, or voice mail circuit card.

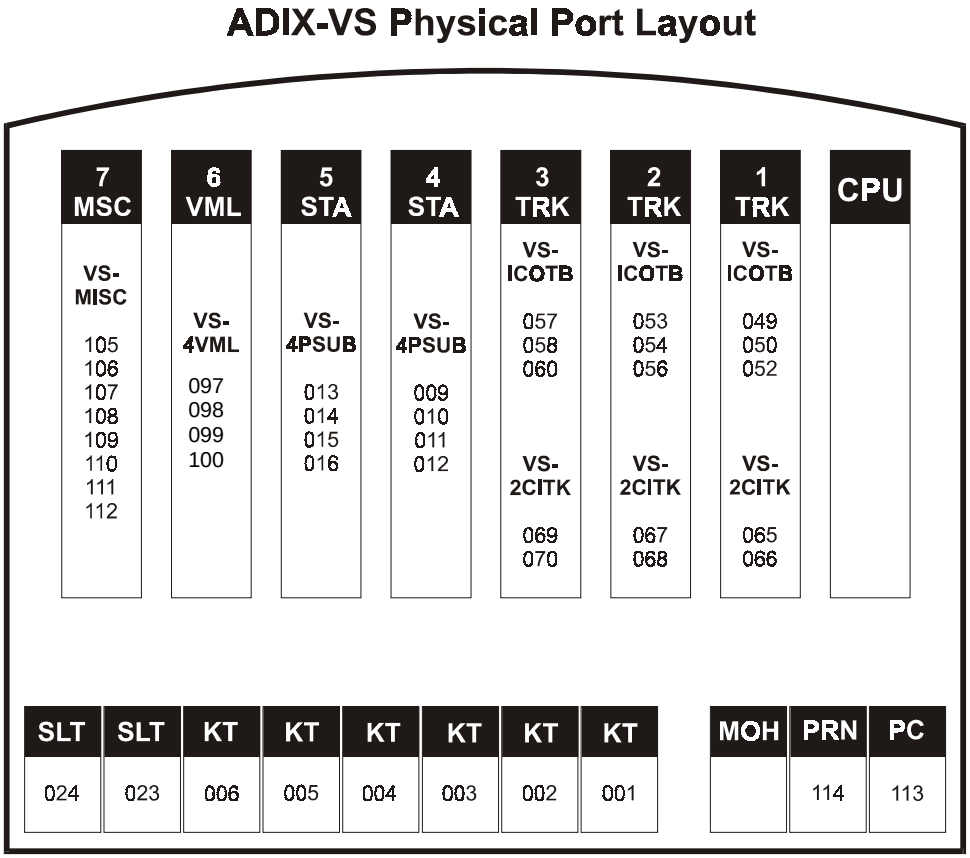

FIGURE 29. ADIX-VS PHYSICAL PORT LAYOUT

Logical Port Layout

Each ADIX-VS physical port has a corresponding *logical port number*. Depending on the type of circuit, the logical port number will be either a:

- Station Logical Port Number
- Trunk Logical Port Number
- Miscellaneous Logical Port Number

The logical port number identifies an exact circuit for programming. For example, if an IX-2CITK card is installed in card slot 1, it is connected to circuits represented by physical ports 065 and 066. These physical ports correspond with trunk logical ports 010 and 011.

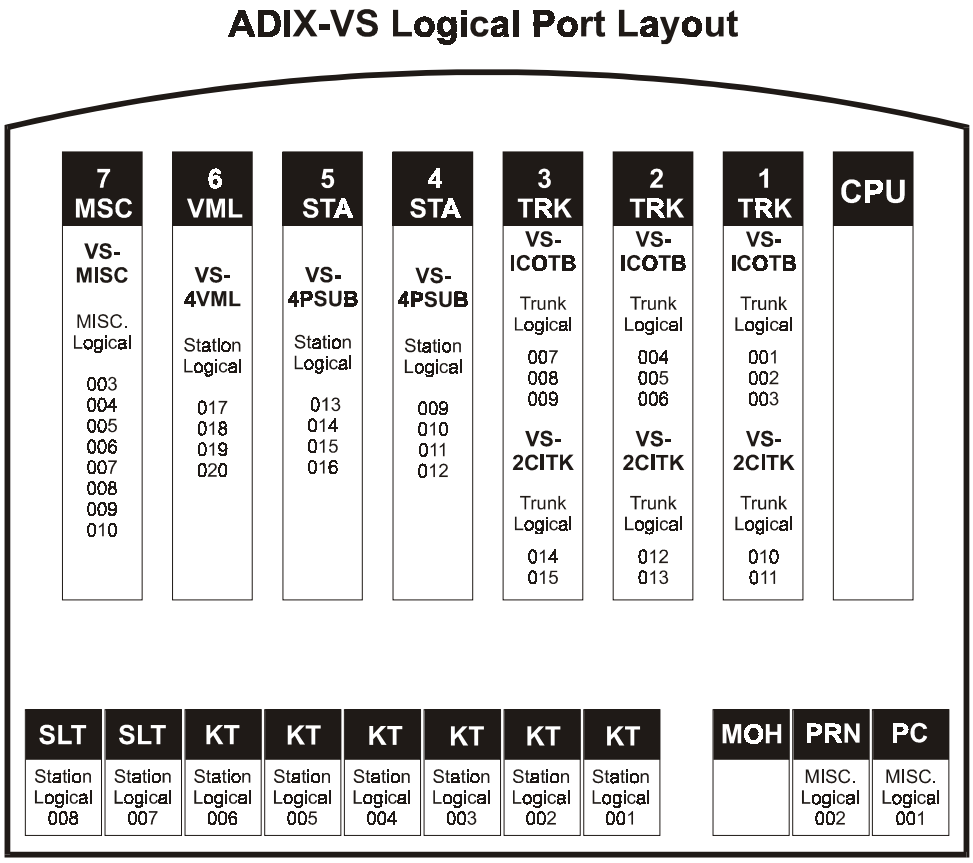

FIGURE 30. ADIX-VS LOGICAL PORT LAYOUT

Chapter 2 •

Database Description

This section lists the database programming Class and Item information that has changed, or was added with the introduction of the ADIX-VS. The data that has changed is in effect only when an ADIX-VS is used.

Class 02

Class 02, Item 01 — System Speed Dial Type

Number of System Speed Dial Codes = 90

Class 04

Class 04, Item 70, Num 36 — Stored Call Type

Abandoned Calls Only = 0 (default)

All Calls = 1

Class 04, Item 70, Num 38 — Answering Machine Emulation Monitor Type

Automatic Voice Mail Monitor = 0 (default)

User Initiated Voice Mail Monitor = 1

Class 04, Item 77, Num 23 — Stop Message Packet

Stop message packet = 22 (default)

Class 07

Class 07, Item 01 — Park Orbit Number

Park Orbit No. 1 – No.10 601 – 610

Class 07, Item 02 — Hunt Group Access Number

Hunt Group No. 1 – No.10 701 – 710

Class 07, Item 03 — Trunk Group Access Number

Group Access No. 1 – No. 10 {OPT=13/ Multiple = 11}

Class 07, Item 04 — Paging Group Access Number

Access code for All Call Paging – Group 13 (data in Class 08.04 Group 5 and Group 10)

Class 07, Item 06 — Feature Access Codes

Feature 01	501	Cancel Code
Feature 03	503	Speed Dial for SLT
Feature 05	505	Last Number Redial
Feature 08	508	Hold/Hold Pick-Up
Feature 09	509	Group Call Pick-Up In Group
Feature 10	510	Group Call Pick-Up In Group
Feature 11	511	Directed Call Pick-Up
Feature 12	512	Station Park Pick-Up
Feature 13	513	Remote Station Park Pick-Up
Feature 14	514	Long CO Flash
Feature 15	515	Short CO Flash
Feature 16	516	Add
Feature 18	518	ICM Call Back
Feature 19	519	Message Waiting
Feature 20	520	Call Forward Destination
Feature 21	521	Call Forward Mode
Feature 22	522	Call Forward Activation
Feature 30	0	All Attendant Call
Feature 46	546	UNA Pick-Up
Feature 48	[*]	Voice Mail Access (Hunt Group 47)

Class 08

Class 08, Item 02 — Hunt Group Station

Assign all four Voice Mail ports to Hunt Groups 17, 18, 19, 20

Class 08, Item 04 — Paging Group – Station/ Zone

Assigns stations to a paging group according to the following:

Internal Paging ..... Groups 1-4

Internal All Call ..... Group 5

External Paging ..... Groups 6-9

External All Call ..... Group 10

Class 10

Class 10, Item 02 — Station Access Number

The table below lists default numbering for station numbers. The numbers must match the corresponding voicemail mailbox numbers.

IMPORTANT: The attendant station must be assigned to physical and logical port 1 only.

Logical Port Number	Station Type	Extension Number
001	Attendant	201
002	Digital Station	202
003	Digital Station	203
004	Digital Station	204
005	Digital Station	205
006	Digital Station	206
007	Single Line	215
008	Single Line	216
009	Digital Station	207
010	Digital Station	208
011	Digital Station	209
012	Digital Station	210
013	Digital Station	211
014	Digital Station	212
015	Digital Station	213
016	Digital Station	214

Class 10, Item 72 — Programming Reserve 3

EXTLxxx-07: Disable = 0; Enabled = 1

Class 11

Class 11, Item 02 — Trunk Access Number

Logical Port Number	Access Number
1	111
2	112
4	113
5	114
7	115
8	116
10	101
11	102
12	103
13	104
14	105
15	106

Class 14

Class 14, Item 01 — Station Key Pattern

Note: The [VMMNT] key is programmed as key number 175. See page 121 for more information.

Pattern No. 001 – KT No.1 (Default), with CITK

COL 10	COL 11	COL 12	COL 13	COL 14	COL 15
DSS 201	DSS 202	DSS 203	DSS 204	DSS 205	DSS 206
DSS 207	DSS 208	DSS 209	DSS 210	DSS 211	DSS 212
DSS 213	DSS 214	DSS 215	DSS 216	SysSPD01	SysSPD02

Pattern No. 002 – VT No.1 with CITK

COL 10	COL 11	COL 12	COL 13
FWD	FLASH	ADD	MSG

Pattern No. 003 – VT No.2 with CITK

COL 10	COL 11	COL 12	COL 13
SPEED	FLASH	ADD	MSG

Pattern No. 004 – KT No.3 with BRI

COL 1	COL 2	COL 4	COL 5	COL 7	COL 8
DSS 201	DSS 202	DSS 203	DSS 204	DSS 205	DSS 206
DSS 207	DSS 208	DSS 209	DSS 210	DSS 211	DSS 212
DSS 213	DSS 214	DSS 215	DSS 216	SysSPD01	SysSPD02

Pattern No. 005 – VT No.3 with BRI

COL 1	COL 2	COL 4	COL 5
FWD	FLASH	ADD	MSG

Pattern No. 006 VT No.4 with BRI

COL 1	COL 2	COL 4	COL 5
SPEED	FLASH	ADD	MSG

Class 15

Class 15, Item 01 Attendant Key Pattern

Note: The [VMMNT] key is programmed as key number 175. See page 121 for more information.

Pattern No. 001 - SATT with CITK

COL 10	COL 11	COL 12	COL 13	COL 14	COL 15
DSS 202	DSS 203	DSS 204	DSS 205	DSS 206	DSS 207
DSS 208	DSS 209	DSS 210	DSS 211	DSS 212	DSS 213
DSS 214	DSS 215	DSS 216	SysSPD01	SysSPD03	SysSPD03

Class 24

Class 24, Caller ID/ ANI Conversion Data

Caller ID/ ANI incoming number range = 1-100

Class 25

Class 25, DNIS Conversion Data

DNIS incoming number range = 1-16

Chapter 3 •

Database Programming Access

Database Programming Modes

Installer Programming Mode. Installer Programming Mode provides full access to ADIX-VS database programming. You may access Installer Programming Mode from the Attendant Position (Extension 201/Station Logical Port 001).

☞ **To access system programming in Installer Programming Mode:**

1. Enter the following key sequence from the Attendant Position (Extension 201/Station Logical Port 001) with the telephone on-hook:
2. [FEAT] + [#] + [1] + *2349 (ADIX)*
3. The following information is displayed on the station LCD:

```
ENTER CLASS 0#1
ADIX-KT  24  LINE
```

User Programming Mode. User Programming Mode provides limited access to ADIX-VS database programming. You may access User Programming Mode from the Attendant Position (Extension 201/Station Logical Port 001).

☞ **To access system programming in User Programming Mode:**

1. Enter the following key sequence from the Attendant Position (Extension 201/Station Logical Port 001) with the telephone on-hook:
2. [FEAT] + [#] + [1] + *8787(USVS)*
3. The following information is displayed on the station LCD:

```
ENTER CLASS 0#1
ADIX-KT  24  LINE
```

Chapter 4 •

Database Programming Items

Once you have accessed system programming mode, the following database items are accessible as indicated depending on the programming mode — Installer Mode or User Mode. From Installer Mode, all database items are accessible. From User Mode, database items listed in italics are not accessible. Consult the Database Programming Guide section of the ADIX Technical Manual, 4th Edition for explicit programming instructions.

Class 01

01.01 – System Size
(01.02)
01.03 – Port Definition
01.04 – Port Configuration
(01.05)
01.06 – Number of System Station Ports
01.07 – Number of System Trunk Ports

Class 02

02.01 – System Speed Dial Type
02.02 – Modem Signal Output Level
02.03 – Music on Hold Source Selection
02.04 – Remote System ID
02.05 – Remote Programming Password
02.06 – Diagnostics Callout Number
02.07 – Diagnostics Callout Time
02.08 – Diagnostics Callout Level
02.09 – Diagnostics Callout Line Group
02.10 – CO Monitor Guard Time
02.11 – CO Interrupt Tone Duration
02.12 – CO Interrupt Tone Repetition
02.13 – CO Interrupt Tone Allowance
02.14 – CO Continuous Tone Duration
02.15 – CO Silence Duration in Seconds
02.16 – CO Silence – Noise Allowance
02.17 – System Prefix
02.18 – Holiday List
02.19 – Time Zone
02.20 – System Text Message

Class 03

03.01 – Time of Day
03.02 – Calendar

Class 04

04.01 – Name of Subsystem
04.02 – Communication Port
04.03 – Background Music Input Port
04.04 – Background Music Output Port
04.05 – Music on Hold Input Port
04.06 – Pooled Modem Port

Class 04 (Cont.)

04.07 – Wake-Up Call Report Port
04.08 – Hold Recall Timer
04.09 – Call-Back Duration
04.10 – Timed Trunk Queuing
04.11 – Off-Hook Trunk Queuing Duration
04.12 – Camp-On Duration
04.13 – Call Forward No Answer
04.14 – Automatic CO Answer
04.15 – Attendant DIL Intercept
04.16 – Delayed Ringing Timer
04.17 – Doorphone Answer Time
04.18 – Reminder Ring Duration
04.19 – LCD Duration
04.20 – VSS Recording Time
04.21 – Hunting Time
04.22 – ICM Call Mode
04.23 – Shift/Clear Call
04.24 – Attendant Call Park Orbit
04.25 – Calls for Pickup
04.26 – Networking Plan
04.27 – Station Password Digits
04.28 – Hotel Mode
04.29 – Dial Pulse SLT Consultation Hold
04.30 – Trunk-to-Trunk Hold
04.31 – Night Mode Start Time
04.32 – Automatic CO Answer Start Time
04.33 – Automatic CO Answer Day
04.34 – UCD Answer Time
04.35 – Miscellaneous Function Port
04.36 – Miscellaneous Relay Timer
04.37 – Miscellaneous Function
04.38 – Hunting Method in Trunk Group
04.39 – DISA-ICM Call
04.40 – DISA-Paging Call
04.41 – DISA-Waiting Time
04.42 – DISA-Total Duration
04.43 – Remote CO Forward Incoming Group
04.44 – Remote CO Forward Outgoing Group

Class 04 (Cont.)
04.45 – Remote CO Forward Message Number
04.46 – Remote CO Forward Duration
04.47 – Automatic Repeat Dial-Duration
04.48 – Automatic Repeat Dial-Off Hook
04.49 – Automatic Repeat Dial-Repetition
04.50 – SMDR-Output Port
04.51 – SMDR-Minimum Call Duration
04.52 – SMDR-Incoming Call Report
04.53 – SMDR-Toll Only Report
04.54 – SMDR-Account Code Only (0-1)
04.55 – True Attendant Position
04.56 – Conference Tone Indication
04.57 – Reserved
04.70 – Programming Reserve 1
04.71 – CC/VM Data
04.72 – Programming Reserve 3
04.77 – VM/AA Attendant Packet Codes
04.78 – Programming Reserve 9

Class 05
05.01 – System Speed Dial – Number
05.02 – System Speed Dial – ID
05.03 – System Speed Dial – Invisible

Class 06
06.01 – Toll Restriction Table
06.02 – Toll Restriction – Plan Table
06.03 – Toll Restriction – Dial Table
06.04 – Toll Restriction – Predial
06.05 – Toll Restriction – Allow List
06.06 – Toll Restriction – Deny List
06.07 – Toll Restriction – SMDR Table
06.08 – Toll Restriction – Equal Access
06.09 – Toll Restriction – Equal Access Pin Code
06.10 – Toll Restriction – Equal Access Pin Position
06.11 – Toll Restriction – Equal Access Pin Prefix
06.12 – Toll Restriction – Equal Access Trunk Group

Class 07
07.01 – Park Orbit Number
07.02 – Hunting Group Access Number
07.03 – Trunk Group Access Number07.04 – Paging Group Access Number
07.05 – PBX Network Access Number
07.06 – Feature Access Number

Class 08
08.01 – Hunt Group – Type
08.02 – Hunt Group – Station
08.03 – Hunt Group – ID
08.04 – Paging Group – Station/Zone
08.05 – UCD Hunt Group
08.06 -

Class 10
(10.01)
10.02 – Station Numbering
10.03 – Station Distance
10.04 – Station User ID
10.05 – Station Password
10.06 – DISA Service
10.07 – Quick Mode Operation
10.08 – Off-Hook ICM
10.09 – Prime Line Access
10.10 – Hookflash Timing
10.11 – Data Module Communication
10.12 – Key Assignment
10.13 – Preringing
10.14 – Dial Confirmation Tone
10.15 – Handset Volume Control
10.16 – Call Forwarding
10.17 – Unscreened Transfer (SLT)
10.18 – SMDR Report
10.19 – Queuing Class
10.20 – Off-Hook Trunk Queuing
10.21 – Outgoing Trunk Group
10.22 – Incoming CO Access Group
10.23 – Toll Restriction Class
10.24 – System Speed Access
10.25 – System Speed Toll Restriction
10.26 – DP to DTMF Signal Alternating
10.27 – Automatic Signal Alternating
10.28 – Dial On Conversation
10.29 – Preset Dial
10.30 – Automatic Outgoing CO
10.31 – Equal Access
10.32 – Optimized Routing Call
10.33 – Forced Optimized Routing
10.34 – Route Advance Step
10.35 – Off-Hook CO Answering
10.36 – Answer Hold
10.37 – Hold Recall
10.38 – Paging Access
10.39 – Direct Station-to-Station Call
10.40 – Barge-In Station
10.41 – Busy Override
10.42 – Do Not Disturb
10.43 – Off-Hook Signaling
10.44 – Protected Station
10.45 – Message Key
10.46 – SLT Hookswitch Flash
10.47 – Howler Alert
10.48 – Calling Mode
10.49 – Meet-Me Answer Group
10.50 – ICM Group
10.51 – Call Pick-Up Group
10.52 – Toll Restriction Class Alternating Group

Class 10 (Cont.)
10.53 – Attendant Automatic Hold
10.54 – Attendant Call Progress Tone
10.55 – Attendant Overflow Level
10.56 – Attendant Overflow Destination
10.57 – Doorphone Ringing
10.58 – Doorphone Relay
10.59 – Doorphone Tone
10.60 – Data Module Link
10.70 – Call Coverage of ICM Calls
10.71 – Programming Reserve 2
10.72 – Programming Reserve 3
10.73 – Call Forward Modes
10.75 – Programming Reserve 6
10.78 – Fixed Call Forward Destination

Class11
(11.01)
11.02 – Trunk Access Numbers
11.03 – Line ID
11.04 – Dial Waiting Time
11.05 – Dial Starting Time
11.06 – Inter-Digit Time
11.07 – Minimum Pause Time
11.08 – Dial Type
11.09 – DTMF Dial Speed
11.10 – DTMF Dial (Altered)
11.11 – Dial Pulse Speed
11.12 – Dial Pulse Break Ratio
11.13 – Sender Time Out
11.14 – Automatic Pause Time
11.15 – CO Flash Time
11.16 – Centrex Flash Time (Short Flash)
11.17 – Ring Interval Time
11.18 – Line Loss
11.19 – Disconnect Signal
11.20 – E&M On-Hook Detect
11.21 – Prime Line
11.22 – DND CO Override Ringing
11.23 – UCD Line
11.24 – Automatic Answer Line
11.25 – DISA Trunk
11.26 – Attendant Intercept Line
11.27 – UNA Trunk
11.28 – UNA Relay Number
11.29 – SMDR Report
11.30 – Ringing Method
11.31 – Ringing Tone
11.32 – Ringing Station
11.33 – Delayed Ringing Station
11.34 – DIL to Hunt Group
11.35 – Loud Ringer Relay Number
11.37 – Forced Release Condition
11.38 – Outgoing CO Group
11.39 – Incoming CO Group

Class 11 (Cont.)
11.40 – Toll Restriction Group Number
11.41 – Predial Group Number
11.42 – Equal Access Group Number
11.43 – Incoming CO Access Class
11.44 – Access Group Number
11.45 – Auto Answer Message 1
11.46 – Auto Answer Message 2
11.47 – DISA / T1 E&M Virtual Station
11.48 – DISA Message Number
(11.49)
(11.50)
11.70 — Call Coverage Trunk
11.72 – UCD Overflow Calls
11.73 – ISDN Trunk Class (Reserve 4)
11.74 – ISDN Trunk Class (Reserve 5)
11.77 – ISDN Trunk Class (Reserve 8)

Class12
12.01 – Station Speed Dial (001-224)
12.02 – Station Speed Dial – ID (001-224)

Class14
14.01 – Station Key Assignment

Class15
15.01 – Attendant Key Assignment

Class17
17.01 – Bypass Code Table
17.02 – Area Code Table
17.03 – Six-Digit Route Selection Table
(17.04)
17.05 – General Office Code Table
17.06 – Route Table
17.07 – Delete Index Table
17.08 – Delete Dial Table
17.09 – Add Index Table
17.10 – Add Area Code Table
17.11 – Add Office Code Table
17.12 – Add Dial Index Table
17.13 – Add Dial Table
17.14 – Specific Code Table
17.15 – Area/Office Screening Table
17.16 – Eight-Digit Dial Enable
17.17 – Additional Office Code Prefix Information

Class 24
24.01 – Caller ID/ANI Incoming Number
24.02 – Caller ID/ANI Conversion Number
24.03 – Caller ID/ANI Number ID
(Class 24.04)
24.05 – Caller ID/ANI Conversion Digits
24.06 – Caller ID/ANI Conversion Starting Position
24.07 — ANI Enabled ISDN Trunk

Class 25
25.01 — DNIS Incoming Number
25.02 — DNIS Conversion Number
25.03 — DNIS Number ID
(25.04)
25.05 — DNIS Conversion Digits
25.06 — DNIS Conversion Starting Position
25.07 — DNIS Enabled ISDN Trunk

Class 26
26.01 – Station Text Message (001-224)

Class 28
28.01 – Network Number
28.02 – Network Attribute
28.03 – Network Internal
28.04 – Network Feature
28.05 – Network External
28.06 – Network Route Advance Step

Class 29
(29.01)
(29.02)
29.03 – ISDN Trunk Group
29.04 – Call-by-Call Attribute
29.05 – Service Parameters
29.06 – Ringing Station by ANI Table
29.07 – Ringing Station by DNIS Table
29.08 – B-Channel Table Number
29.09 – Calling Party Number
29.10 -

Class 30
30.01 – Attached B Channel

Chapter 5 •

ADIX-VS Feature Enhancements

The ADIX-VS contains the following feature enhnacments. These enhancements are not included in the ADIX Technical Manual

- Caller ID/ANI Information Storage
- Voice Mail Monitor (Answering Machine Emulation)

A brief description of each feature, including programming information, is included below.

Caller ID / ANI Information Storage

When a call is received on a caller ID (VS-2CITK) or ANI (VS-ICOTB) line, ADIX-VS will capture and store in the system memory information about the caller received with the call. This information includes the caller's telephone number and name, date and time of the call, trunk number, and destination station. This information can be output as a system event code or to SMDR. Information for the 50 most recent calls can be stored in the system memory on a first in, first out basis. Two modes of storage are available for this feature:

- Abandon Call Storage
- All Call Storage

Abandon Call Storage. When Abandoned Calls Only is selected as the storage mode for this feature, information will only be stored for the following types of calls:

- Caller hangs up or is disconnected before the call is answered.
- Caller hangs up or is disconnected while on hold or during hold recall.
- Caller hangs up or is disconnected during camp-on transfer or camp-on recall.

All Call Storage. When All Call is selected as the storage mode for this feature, the system will capture and store information about the caller received with the 50 most recent calls on caller ID (VS-2CITK) or ANI (VS-ICOTB) lines.

The Caller ID Information Storage feature may be programmed to store the Caller ID/ANI/DNIS information sent with either All Calls, or Abandoned Calls only. This feature is programmed in Class 04.70 <NUM36>. Programming in Class 04.70 <NUM36> affects this feature system-wide.

For detailed information on the Abandon Call Storage feature, please refer to the Features and Operations section of the ADIX Technical Manual.

Programming

Class	Item	Num	Description	Input	Default
04	70	36	Determines if Caller ID/ANI/DNIS information is saved for All Calls or Abandoned Calls Only	0 = Abandoned Calls Only 1=All Calls	0

Conditions

1. When 1 (All Calls) is selected in Class 04.70<NUM36>, no indication is given to distinguish between abandoned calls and answered calls.
2. Regardless of the programming in Class 04.70<NUM36>, only abandoned calls will be denoted with “ABN” in the Note column of the SMDR printout.
3. When 1 (All Calls) is selected in Class 04.70<NUM36>, the Caller ID/ANI/DNIS information is not stored until the call is disconnected.
4. When 1 (All Calls) is selected in Class 04.70<NUM36> and the call is transferred or forwarded, the USAS key will light only at the final destination station.
5. When 1 (All Calls) is selected in Class 04.70<NUM36> and the call is being monitored by another system extension, the USAS key will light only at the extension connected to the outside trunk.
6. When 1 (All Calls) is selected in Class 04.70<NUM36> and the called extension receives a Whisper Page from another system extension, the USAS key will light only at the extension connected to the outside trunk.
7. When 1 (All Calls) is selected in Class 04.70<NUM36> and a trunk-to-trunk conference is initiated that is not subject to holding or forwarding, USAS key indication is not provided. Indication of the call is provided only on the USATn key. If the trunk-to-trunk conference is subject to forwarding or holding, the USAS key at the station that initiated the forward or hold will provide indication of the stored call.
8. If call disconnection is initiated by forced release, information provided with that call will not be stored.

Voice Mail Monitor (Answering Machine Emulation)

When a station is set for call forward to voice mail, notification is sent to the station when a call is forwarded to voice mail. The station user may then choose to monitor the voice mail message as it is being recorded. During voice mail message recording, the station user may initiate a conversation with the calling party by pressing a [VMMNT] key. The system may be programmed for either Automatic Monitor or User Initiated Monitor in Class 04.70 <NUM38>. The station user may turn this feature on or off and set the mode from the KT.

In order to use this feature at a system extension, the extension must be enabled Class 10.72 <EXTLxxx-07> and assigned a [VMMNT] key in Class 14.01/15.01 (key data=175).

When a call is forwarded to voice mail, the forwarding station, if idle, will hear monitor start tone for 200 milliseconds. The Answering Machine Emulation feature will not operate if the called extension is off-hook or on another call. Depending on the programming in Class 04.70<NUM38>, monitoring will begin automatically, or only if the station user presses the [VMMNT] key. Once monitoring is initiated, the [VMMNT] key red LED will begin to flash. When monitoring starts, the [VMMNT] key LED indication will change from blinking red to solid green. While in the monitor state, the user has three options:

- Continue monitoring until the caller hangs up and the disconnect packet is received (Class 04.77 <NUM21>).
- Go on-hook to end the monitor.
- Press the [VMMNT] hunt key to initiate a conversation with the calling party.

If the user chooses to terminate the voice mail monitoring without initiating a conversation, the [VMMNT] key will revert back to a blinking red LED. If the user chooses to initiate a conversation with the caller, the [VMMNT] key will revert to inactive and the voice mail message will be deleted.

Programming

Note: Packet 23 (Class 04.77<23>) Voice Mail Stop Recording/ Delete Message, d1 must be set to 2222 for Voice Mail Monitor (Answering Machine Emulation) to function.

Class	Item	Num	Description	Input	Default
04	70	38	Program the system for either Automatic, or User Initiated Voice Mail Monitoring using the [VMMNT] key.	0 = Automatic Voice Mail Monitor 1=User Initiated Voice Mail Monitor	0
04	77	21	Disconnect Packet		
04	77	23	Voice Mail Stop Recording/ Delete Message Packet	**d1= 2222**	2
10	72	EXTLxxx-07	Enable/Disable each system extension to use the Answering Machine Emulation feature	0=Disabled 1=Enabled	
14/15	01	Key Pattern	[VMMNT] Key	175	

Operation

☞ **To initiate Voice Mail Monitoring:**

1. After the call is answered by voice mail at an idle station:
2. If set for manual activation, You will hear a Monitor Tone
3. Press the Voice Mail Monitor button **VMMNT**
4. The Voice Mail Monitor button **VMMNT** red LED will begin to flash
5. When the Voice Mail Monitor button **VMMNT** green LED lights, you will hear the caller's message as it is recorded.

☞ **To cancel Voice Mail Monitoring:**

1. Hang up or press **SPKR**
2. The Voice Mail Monitor button **VMMNT** red LED will begin to flash
3. The voice mail message will be saved.

☞ **To begin a conversation with the caller during monitor:**

1. While listening to the caller record a message
2. Press the Voice Mail Monitor button **VMMNT**
3. The Voice Mail Monitor button **VMMNT** green LED will turn off
4. Begin speaking with the caller.
5. The voice mail message will be deleted.

☞ **To Activate/Deactivate or Change the Voice Mail Monitor Mode:**

1. While your station is idle, press **SPKR**
2. Press the Voice Mail Monitor button **VMMNT**
3. Press 1 to deactivate/activate
   Press 2 to set the mode as Manual
   Press 3 to set the mode as Automatic

Conditions

1. Packet 23, (Class 04.77<23>), d1 must be programmed as “2222”.
2. Each system extension must be enabled to use this feature in Class 10.72<EXTLxxx-07>.
3. In order to use this feature, the station must be enabled for Call Monitor and Barge-In (Class 10.40).
4. If multiple forwards occur, the originating station receives notification when record to voice mail starts.
5. Audible indication of Voice Mail recording is only provided to an idle station.
6. A station may begin to monitor a call being recorded to voice mail at any time by pressing the [VMMNT] key with a flashing red LED.
7. This feature operates for one call at a time. If a second call is forwarded to voice mail while the Answering Machine Emulation feature is active, the second call is ignored.
8. In order for this feature to operate, a conference circuit is required. If no conference circuit is available, busy tone will be sent to the originating station.
9. When a headset is used, automatic monitoring will not operate. In addition, audible indication is not provided.

ADIX-VS

ADIX-VS Physical Port Layout

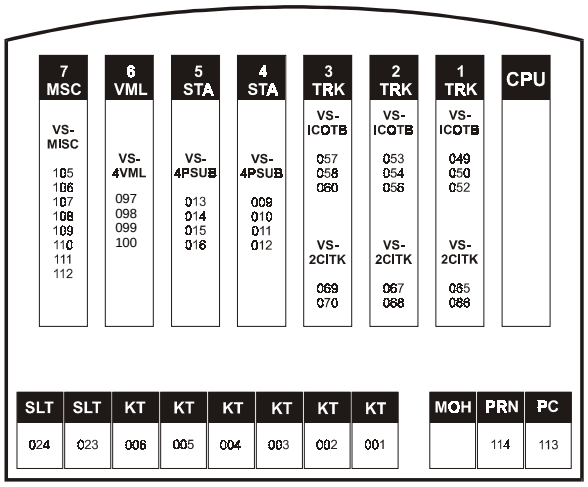

ADIX-VS Logical Port Layout

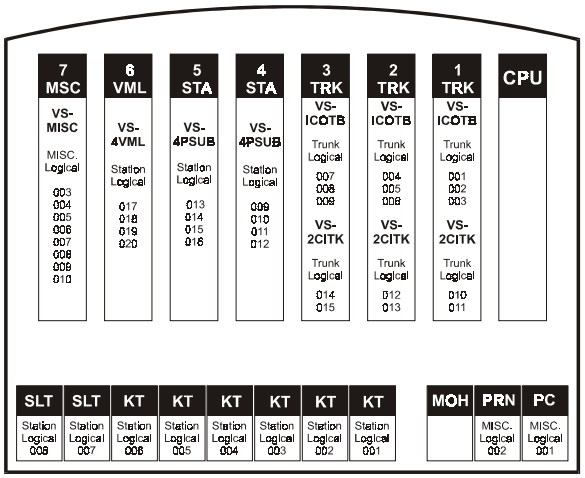

IWATSU®
TELECOMMUNICATIONS PRODUCTS

IWATSU AMERICA, INC.
430 Commerce Blvd., Carlstadt, NJ 07072
VOICE: 201-935-8580, EMAIL: info@iwatsu.com, WEB: www.iwatsu.com

Printed in USA

Part Number: 10830